Mission Oaks Recreation and Park District
Sacramento County, California

Technical Specification for Mission Oaks Recreation and Park District
District Office Reroof

Mission Oaks Recreation & Park District
3344 Mission Ave Carmichael CA 95608
Bid Date: 12/19/2025 @ 2:00pm

BID DOCUMENTS

FOR

MISSION OAKS RECREATION & PARKS DISTRICT

DISTRICT OFFICE REROOF

AT

MISSION OAKS DISTRICT OFFICE
3344 MISSION AVENUE CARMICHAEL, CA 95608

FOR

MISSION OAKS RECREATION & PARKS DISTRICT
3344 MISSION AVENUE CARMICHAEL, CA 95608

REQUEST FOR QUALIFICATIONS
Implementation of the Mission Oaks Recreation & Park District Office Reroof **District**

Table of Contents

SECTION 1: INTRODUCTION 5
1.1 Statement of Purpose 15
1.2 Scope of Work – See Section 10 for Additional Details, Maps and Bid Forms 15
SECTION 2: SUBMITTAL DEADLINE 16
SECTION 3: GENERAL REQUIREMENTS AND INFORMATION 16
3.1 District Contact for Request for Proposals 16
3.2 Required Review and Waiver of Objections by Responding Firms 16
3.3 Proposals 17
3.4 Proposal Preparation, Interview and Negotiation Costs 17
3.5 Proposal Withdrawal 17
3.6 Proposal Amendment 17
3.7 Proposal Errors 18
3.8 Incorrect Proposal Information 18
3.9 Prohibition of Respondent Terms and Conditions 18
3.10 Assignment and Sub-contracting 18
3.11 Proposal of Alternate Services 18
3.12 Proposal of Additional Services 18
3.13 Insurance 18
3.14 Licensure and Special Certification 18
3.15 Conflict of Interest and Restrictions 19
3.16 RFP Amendment and Cancellation 19
3.17 Right of Rejection 19
3.18 Disclosure of Proposal Contents 20
3.19 Proprietary Information 20
3.20 Severability 20
SECTION 4: SPECIAL REQUIREMENTS 21
4.1 Joint Ventures and Partnering 21

SECTION 5: STATEMENT OF QUALIFICATIONS FORMAT AND CONTENT 21
5.1 General Proposal Requirements 21
5.2 Proposal 22
SECTION 6: COST PROPOSAL 25
SECTION 7: EVALUATION, CONSULTANT SELECTION, AND CONTRACT AWARD 26
7.1 Proposal Evaluation Categories and Maximum Points 26
7.2 Proposal Evaluation Process 26
7.3 Contract Award Process 27
SECTION 8: STANDARD CONTRACT INFORMATION 27
8.1 Contract Approval 27
8.2 Contract Payments 28
8.3 RFP and Proposal Incorporated into Final Contract 28
8.4 Contract Monitoring 28
8.5 Contract Amendment 28
SECTION 9: Maintenance Specifications 28
SECTION 10: Written Work Plan 18
SECTION 11: Proposal Forms 19

NOTICE INVITING BIDS

Mission Oaks Recreation and Park District - District Office Reroof

TO WORK WITH THE MISSSION OAKS RECREATION AND PARKS DISTRICT

NOTICE IS HEREBY GIVEN that the Mission Oaks Recreation and Park District of Sacramento County, California, acting by and through its Governing Board, hereinafter referred to as "District", "MORPD", or "Owner", will receive prior to 2:00 pm December 19th, 2025 sealed bids for the award of a Contract for the following:

BID NO. 2025-01

PROJECT: District Office Reroof

All bids shall be made and presented only on the forms presented by the Owner. Bids shall be received in the Office of the Mission Oaks Recreation & Parks District at 3344 Mission Ave Carmichael CA, 95608 and be opened by the district at a later time. Email bids will not be received and all bids are to be delivered to Mission Oaks Recreation & Parks District. Any bids received after the time specified above or after any extensions due to material changes shall be returned unopened.

The Contract is to be completed by May 1st 2026. CONTRACTOR should consult the Agreement Form regarding any milestones and Liquidated Damages.

There will be a mandatory Pre-Bid Conference at 9:00 am December 9th, 2025 at Mission Oaks Recreation & Parks District at 3344 Mission Ave Carmichael CA, 95608. Any Contractor bidding on the Project who fails to attend the entire mandatory Pre-Bid Conference will be deemed a non-responsive bidder and will have its bid returned unopened.

Each bidder and sub-contractor shall be a licensed contractor pursuant to the California Business and Professions Code to perform the work called for in the Contract Documents. The successful bidder must possess a valid and active Class C-39 License at the time of award and throughout the duration of this Contract. The Contractor's California State License number shall be clearly stated on the bidder's proposal.

Subcontractors shall be licensed pursuant to California law for the trades necessary to perform the Work called for in the Contract Documents. Each bid must strictly conform with and be responsive to the Contract Documents as defined herein.

Payment of current prevailing wages are applicable and shall be mandatory for the project, per the Department of Industrial Relations and pursuant to California Labor Code Sections 1720 et seq.

The Contractor and all subcontractors shall furnish certified payroll records as required pursuant Labor Code section 1776 directly to the Labor Commissioner in accordance with Labor Code section 1771.4 on at least on a monthly basis (or more

frequently if required by the District or the Labor Commissioner) and in a format prescribed by the Labor Commissioner. Monitoring and enforcement of the prevailing wage laws and related requirements will be performed by the Labor Commissioner/ Department of Labor Standards Enforcement (DLSE).

Separate payment and performance bonds, each in an amount equal to 100% of the total Contract amount issued by a California admitted surety as defined in California Code of Civil Procedure Section 995.120, are required, and shall be provided to the Owner prior to execution of the Contract and shall be in the form set forth in the Contract Documents.

It is each bidder's sole responsibility to ensure its bid is timely delivered and received at the location designated as specified above. Any bid received at the designated location after the scheduled closing time for receipt of bids shall be returned to the bidder unopened.

_____

Mission Oaks Recreation & Park District

INSTRUCTIONS TO BIDDERS

1. Preparation of Bid Form and Bidding Procedures. Proposals under these specifications shall be submitted on the blank forms furnished herewith including, but not limited too, the forms in the Special Conditions (if applicable), at the time and place stated in the Notice Calling for Bids. Each bidder shall review and comply with all bidding instructions and requirements set forth herein. All blanks in the Bid Form must be appropriately filled in, and all proposed prices must be stated clearly and legibly in both words and numerals. All bids must be signed by the bidder in permanent ink and submitted in sealed envelopes, bearing on the outside, the bidder's name, address, telephone number, and California Contractor's License number, and the name of the Project for which the bid is submitted. The Owner reserves the right to reject any bid if all of the above information is not furnished. It is each bidder's sole responsibility to ensure its bid is timely delivered and received at the location designated as specified above. Any bid received at the designated location after the scheduled closing time for receipt of bids shall be returned to the bidder unopened.

2. Bid Security. Each bid must be accompanied by one of the following forms of bidder's security: (1) cash; (2) a cashier's check made payable to the Owner; (3) a certified check made payable to the Owner; or (4) a bidder's bond executed by a California admitted surety as defined in Code of Civil Procedure Section 995.120, made payable to the Owner, in the form set forth in the Contract Documents. Such bidder's security must be in an amount not less than **ten percent (10%)** of the maximum amount of such bidder's bid as a guarantee that the bidder will enter into the Contract, if the same is awarded to such bidder, and will provide the required Performance and Payment Bonds, insurance certificates and any other required documents. In the event that a bidder is awarded the Contract and such bidder fails to enter into said Contract or provide the surety bond or bonds within five (5) calendar days after award of the Contract to bidder, said security will be forfeited.

3. Signature. The bid form, all bonds, all designations of subcontractors, the Contractor's Certificate, the Agreement, and all Guarantees must be signed in permanent ink in the name of the bidder and must bear the signature in longhand of the person or persons duly authorized to sign the bid.

   If bidder is a corporation, the legal name of the corporation shall first be set forth, together with two signatures: one from the President and one from the Secretary or Assistant Secretary. Alternatively, the signature of other authorized officers or agents may be affixed, if a certified copy of the resolution of the corporate board of directors authorizing them to do so is provided to the Owner. Such documents shall include the title of such signatories below the signature and shall bear the corporate seal.

   If bidder is a partnership, the true name of the firm shall first be set forth, together with the names of all persons comprising the partnership or co-partnership. The bid must be signed by all partners comprising the partnership

unless proof in the form of a certified copy of a statement of partnership acknowledging the signer to be a general partner is presented to the Owner, in which case the general partner may sign.

Bids submitted as joint ventures must so state and be signed by each joint venturer.

Bids submitted by individuals must be signed by the bidder unless an up to date power- of-attorney is on file in the Owner office, in which case, said person may sign for the individual.

The above rules also apply in the case of the use of a fictitious firm name. In addition, however, where a fictitious name is used, it must be so indicated in the signature.

4. Modifications. Changes in or additions to the bid form, recapitulations of the work bid upon, alternative proposals, or any other modification of the bid form which is not specifically called for in the Contract Documents may result in the Owner's rejection of the bid as not being responsive to the Notice Inviting Bids. **No oral or telephonic modification of any bid submitted will be considered**.

5. Erasures, Inconsistent or Illegible Bids. The bid submitted must not contain any erasures, interlineations, or other corrections unless each such correction creates no inconsistency and is suitably authenticated by affixing in the margin immediately opposite the correction the signature or signatures of the person or persons signing the bid. In the event of inconsistency between words and figures in the bid price, words shall control figures. In the event that the Owner determines that any bid is unintelligible, inconsistent, or ambiguous, the Owner may reject such bid as not being responsive to the Notice Inviting Bids.

6. Examination of Site and Contract Documents. Each bidder shall visit the site of the proposed work and become fully acquainted with the conditions relating to the construction and labor so that the facilities, difficulties, and restrictions attending the execution of the work under the Contract are fully understood. Bidders shall thoroughly examine and be familiar with the drawings, specifications and all others documents and requirements that are attached to and/or contained in the Project Manual. The failure or omission of any bidder to receive or examine any Contract Documents, Special Conditions (if any), form, instrument, addendum, or other document or to visit the site and become acquainted with conditions there existing shall not relieve any bidder from obligations with respect to the bid or to the contract. The submission of a bid shall be taken as prima facie evidence of compliance with this section. Bidders shall not, at any time after submission of the bid, dispute, complain, or assert that there were any misunderstandings with regard to the nature or amount of work to be done.

7. Withdrawal of Bids. Any bid may be withdrawn, either personally or by written request, at any time prior to the scheduled closing time for receipt of bids. The bid security for bids withdrawn prior to the scheduled closing time for receipt of bids, in accordance with this paragraph, shall be returned upon demand therefor.

No bidder may withdraw any bid for a period of ninety (90) calendar days after the date set for the opening of bids.

8. Agreements and Bonds. The Agreement form which the successful bidder, as CONTRACTOR, will be required to execute, and the forms and amounts of surety bonds which will be required to be furnished at the time of execution of the Agreement, are included in the bid documents and should be carefully examined by the bidder. The number of executed copies of the Agreement, the Performance Bond, and the Payment Bond required is three (3). Payment and Performance bonds must be executed by an admitted surety insurer as defined in Code of Civil Procedure 995.120.

9. Interpretation of Plans and Documents/Pre-Bid Clarification. If any prospective bidder is in doubt as to the true meaning of any part of the Contract Documents, or finds discrepancies in, or omissions, a written request for an interpretation or correction thereof may be submitted to the Owner. The bidder submitting the request shall be responsible for its prompt delivery. **Any interpretation or correction of the Contract Documents will only be made by Addendum duly issued, and a copy of such Addendum will be made available for each contractor receiving a set of the Contract Documents.** No person is authorized to make any oral interpretation of any provision in the Contract Documents, nor shall any oral interpretation be binding on the Owner. If discrepancies on drawings, specifications or elsewhere in the Contract Documents are not covered by addenda, bidder shall include in their bid methods of construction and materials for the higher quality and complete assembly. Each request for clarification shall be submitted in writing, via email, to only the following persons:

   Attn: J.R. Hichborn, Parks Superintendent
   Mission Oaks Recreation and Parks District
   3344 Mission Avenue
   Carmichael, CA 95608

   Each transmitted request shall contain the name of the person and/or firm filing the request, address, telephone and fax number, Specifications and/or Drawing number, and document title. Bidder is responsible for the legibility of hand written requests. Pre-bid clarification request shall be filed a minimum of six (6) days prior to bid opening. Requests received less than six (6) days before bid opening shall not be considered or responded to. A written response to timely pre-bid clarifications requests which materially affects the bidders price will be made by Addendum issued by the District not less than seventy-two (72) hours prior to bid opening.

10. Bidders Interested in More Than One Bid. No person, firm, or corporation shall be allowed to make, or file, or be interested in more than one prime bid for the same work unless alternate bids are specifically called for. A person, firm, or corporation that has submitted a proposal to a bidder, or that has quoted prices

of materials to a bidder, is not thereby disqualified from submitting a proposal or quoting prices to other bidders or making a prime proposal.

11. Award of Contract. The Contract will be awarded to the lowest responsive responsible bidder by action of the governing Board pursuant to the terms and conditions of the Contract Documents including, but not limited to, the Special Conditions (if applicable). The Owner reserves the right to reject any or all bids, or to waive any irregularities or informalities in any bids or in the bidding. In the event an award is made to bidder, and such bidder fails or refuses to execute the Contract and provide the required documents within five (5) calendar days after award of the Contract to bidder, the Owner may award the Contract to next lowest responsible and responsive bidder or release all bidders**. Each bid must conform and be responsive to the Contract Documents as defined herein**.

12. Bid Protest Procedure. Only the prime bidder may file a bid protest. The protest shall be filed in writing with the Owner's representative or project manager not less than three (3) working days after the date of the bid opening. An e-mail address shall be provided and, by filing the protest, protesting bidder consents to receipt of e-mail notices for purposes of the Protest and Protest related questions and Protest Appeal, if applicable. The protest shall specify the reasons and facts upon which the protest is based.

    a. Resolution of Bid Controversy: Once the bid protest is received, the apparent lowest responsible bidder will be notified of the protest and the evidence presented. If appropriate, the apparent low bidder will be given an opportunity to rebut the evidence and present evidence that the apparent low bidder should be allowed to perform the Work. If deemed appropriate by the Owner, an informal hearing will be held. Owner will issue a written decision within fifteen (15) days of receipt of the protest, unless factors beyond the Owner's reasonable control prevent such resolution. The Decision on the Bid Protest will be copied to all parties involved in the protest.

    b. Finality. The decision concerning the Bid controversy will be final and not subject to any further appeals.

    c. Failure to comply with this Bid Protest Procedure shall constitute a waiver of the right to protest and shall constitute a failure to exhaust the protesting bidder's administrative remedies.

13. Alternates. If alternate bids are called for, the Contract may be awarded at the election of the Governing Board to the lowest responsible and responsive bidder using the method and procedures outlined in the Notice Inviting Bids and as specified in the section entitled Alternate/Deductive Bid Alternates.

14. Listing Subcontractors. Each bidder shall submit with his bid, on the form furnished with the Contract Documents, a list of the names, license numbers and locations of the places of business of each subcontractor who will perform work or labor or render service to the bidder in or about the project, or a subcontractor who under subcontract to the bidder, specially fabricates and installs a portion of the work, in an amount in excess of one-half of 1 percent of the bidder’s total bid

as required by the Subletting and Subcontracting Fair Practices Act (Public Contract Code Section 4100, et seq.).

15. Workers' Compensation. In accordance with the provisions of Labor Code Section 3700, the successful bidder as the Contractor shall secure payment of compensation to all employees. The Contractor shall sign and file with the Owner the following certificate prior to performing the work under this contract: "I am aware of the provisions of Section 3700 of the Labor Code, which requires every employer to be insured against liability for workers' compensation or to undertake self-insurance in accordance with the provisions of that code, and I will comply with such provisions before commencing the performance of the work of this contract." The form of such certificate is included as a part of the Bid Package.

16. Contractor's License. To perform the work required by this notice, the Contractor must possess the Contractor's License as specified in the Notice Inviting Bids, and the Contractor must maintain the license throughout the duration of the contract. If, at the time of award of the Contract, bidder is not licensed to perform the Project in accordance with Division 3, Chapter 9, of the Business and Professions Code for the State of California and the Notice to Contractors calling for bids, such bid will not be considered and the Contractor will forfeit its bid security to the Owner.

17. Preference for Materials and Substitutions. Unless the Plans and Specifications state that no Substitution is permitted, whenever the Contract Documents indicate any specific article, device, equipment, product, material, fixture, patented process, form, method, construction, or any specific name, make, trade name, or catalog number, with or without the words, "or equal," such specification shall be read as if the language "or equal" is incorporated.

18. Disqualification of Bidders and Proposals. More than one proposal for the same work from any individual, firm, partnership, corporation, or association under the same or different names will not be accepted; and reasonable grounds for believing that any bidder is interested in more than one proposal for the work will be cause for rejecting all proposals in which such bidder is interested and the bidder will forfeit their bid security to the Owner.

19. Unbalanced or Altered Bids. Proposals in which the prices are obviously unbalanced, and those which are incomplete or show any alteration of form, or contain any additions or conditional or alternate bids that are not called for or otherwise permitted, may be rejected. A proposal on which the signature of the bidder has been omitted may be rejected. If, in the District's sole discretion, it determines any pricing, costs or other information submitted by a bidder may result in an unbalanced bid, the District may deem such bid non-responsive. A bid may be determined by the District to be unbalanced if the bid is based on prices significantly less than cost for some work and prices which are significantly overstated in relation to cost for other work, and if there is a reasonable doubt that the bid will result in the lowest overall cost to the District even though it may be the low evaluated bid, or if it is so unbalanced as to be tantamount to allowing an advanced payment.

20. Employment of Apprentices. The Contractor and all Subcontractors shall comply with the provisions of California Labor Code including, but not limited to sections 1777.5, 1777.6, and 1777.7 concerning the employment of apprentices. The Contractor and any Subcontractor under him shall comply with the requirements of said sections, including applicable portions of all subsequent amendments in the employment of apprentices; however, the Contractor shall have full responsibility for compliance with said Labor Code sections, for all apprenticeable occupations, regardless of any other contractual or employment relationships alleged to exist.

21. Non-Collusion Declaration. Public Contract Code Section 7106 requires bidders to submit declaration of non-collusion with their bids. This form is included with the bid documents and must be signed and dated by the bidder under penalty of perjury.

22. Wage Rates, Travel and Subsistence.

a. The Contractor and all subcontractors shall comply with the requirements set forth in Division 2, Part 7, Chapter 1 of the Labor Code. Pursuant to Labor Code Sections 1770 et seq., the Owner has obtained from the Director of the Department of Industrial Relations the general prevailing rate of per diem wages and the general prevailing rate for holiday and overtime work in the locality in which this work is to be performed for each craft, classification or type of worker needed to execute the contract. Copies are available from the Owner to any interested party on request and are also available from the Director of the Department of Industrial Relations. The Contractor shall obtain copies of the above-referenced prevailing wage sheets and post a copy of such wage rates at appropriate, conspicuous, weatherproof points at the Site.

b. Any worker employed to perform work on the Project and such work is not covered by any classification listed in the published general prevailing wage rate determinations or per diem wages determined by the Director of the Department of Industrial Relations, shall be paid not less than the minimum rate of wages specified therein for the classification which most nearly corresponds to the employment of such person in such classification.

c. Holiday and overtime work, when permitted by law, shall be paid for at the rate set forth in the prevailing wage rate determinations issued by the Director of the Department of Industrial Relations or at least one and one-half (1½) times the specified basic rate of per diem wages, plus employer payments, unless otherwise specified in the Contract Documents or authorized by law.

d. These per diem rates, including holiday and overtime work, and employer payments for health and welfare, pension, vacation, and similar purposes, are on file at the administrative office of the Owner, located as noted above and are also available from the Director of the Department of Industrial Relations. It is the Contractor's responsibility to ensure the appropriate prevailing rates of per diem wages are paid for each classification. It shall be mandatory upon the Contractor

to whom the Contract is awarded, and upon any subcontractor under such Contractor, to pay not less than the said specified rates to all workers employed by them in the execution of the Contract.

23. No Telephone or Facsimile Availability. No telephone or facsimile machine will be available to bidders on the Owner premises at any time.

24. Obtaining Bidding Documents. Bidding Documents, may be obtained from:

J.R. Hichborn, Parks Superintendent
Mission Oaks Recreation and Parks District
3344 Mission Avenue
Carmichael, CA 95608

Bidder shall utilize a complete set of Bidding Documents in preparing a bid. The failure or omission of bidder to receive any Bidding Document, form, instrument, Addendum, or other document shall not relieve bidder from any obligations with respect to the bid and/or Contract.

25. Addenda. Clarification or any other notice of a change in the Bidding Documents will be issued only by the Owner or District representative and only in the form of a written Addendum, transmitted by fax, e-mail, or available for pick up to all who are known by the issuing office to have received a complete set of Bidding Documents. Any other purported Addenda are void and unenforceable.

Bidder is responsible for ascertaining the disposition of all Addenda issued regardless of Owner notification and to acknowledge all Addenda in the submitted sealed bid prior to the bid opening. Copies of Addendum will be made available for inspection wherever Bidding Documents are on file for inspection. Each Addendum will be numbered, dated, and identified with the Project number. Oral statements or any instructions in any form, other than Addendum as described above, shall be void and unenforceable. Any Addendum issued by the Owner and not noted as being acknowledged by bidder as required in the Bid Form, may result in the bid being deemed non-responsive.

Checklist of Mandatory Bid Forms

(For Contractor's use and reference only. Additional documents may be required so bidders should carefully review all Contract Documents and Bid Documents)

- ❑ Bid Form w/ Addendum(s) Noted
- ❑ Addendum(s) Signed
- ❑ Designation of Subcontractors
- ❑ Non-Collusion Declaration
- ❑ Bid Bond (or Bid Guarantee Form if Security is other than Bid Bond)
- ❑ Contractor's Certificate Regarding Workers' Compensation
- ❑ Bidders Acknowledgment of Project Schedule

SECTION 1: INTRODUCTION

1.1 Statement of Purpose

The purpose of this Request for Proposals (RFP) is to identify and retain a qualified contractor for the installation of a new roof system as specified for the MORPD District Office.

1.2 Scope of Work – See Section 10 for Additional Details and Bid Forms

The selected firm shall serve as the District's representative when designated. J.R. Hichborn, Parks Superintendent, shall oversee and facilitate the activities of the firm with other government agencies or District departments as needed. The selected firm shall provide professional services and expertise related to implement the District Office Reroof in compliance with the governing codes and applicable regulations.

1.2.1 Specifications

The overall list of tasks that are intended to be the responsibility of the selected firm are described in the Specifications provided below.

1.2.2 Equipment and Supplies

The Contractor shall furnish all tools, materials, supplies, and equipment to perform the tasks identified in Section 1.2.1 above.

1.2.3 Mandatory Responding Firm's Qualifications Requirements (see sections 3.15 and 5.2.2)

The Contractor selected must have qualifications and demonstrated prior experience in the installation of roofing throughout municipalities. Experience with similar park, trail and local governments is required with recent project experience within the last five (2) years.

1.2.4 Area Definitions

A. Project Identification: District Office Reroof
B. Project Location: 3344 Mission Ave Carmichael, CA 95608
C. Owner: Mission Oaks Recreation & Parks District

SECTION 2: SUBMITTAL DEADLINE

Proposals shall be submitted no later than the deadline specified on page 2. Firms shall respond to the written RFP and any exhibits, attachments, or amendments. A responding firm's failure to submit a proposal as required before the deadline shall cause the proposal to be disqualified.

Responding firms assume the risk of the method of dispatch chosen. The District assumes no responsibility for delays caused by any delivery service. Postmarking by the due date shall not substitute for actual receipt of the proposal by the District. Late proposals shall not be accepted, nor shall additional time be granted to any responding firm.

Proposals may not be delivered orally, by facsimile transmission, or by other telecommunication or electronic means.

SECTION 3: GENERAL REQUIREMENTS AND INFORMATION

3.1 District Contact for Request for Proposals

The following District Representative shall be the main point of contact for this RFP.

Attn: J.R. Hichborn, Parks Superintendent
Mission Oaks Recreation and Parks District
3344 Mission Avenue Carmichael, CA 95608
Office (916) 359-1606

3.2 Required Review and Waiver of Objections by Responding Firms

Responding firms should carefully review this RFP and all attachments, including, but not limited to, the *Standard Contract*, for comments, questions, defects, objections, or any

other matter requiring clarification or correction (collectively called "comments"). **Comments must be made in writing and received by the District no later than Friday December 12th @ 2:00pm** (Deadline for Written Comments). Questions can be emailed to JRHichborn@MORPD.com. This will allow issuance of any necessary amendments and help prevent the opening of defective proposals upon which contract award could not be made.

Objections shall be considered waived and invalid if not brought to the attention of the District, in writing, by the Deadline for Written Comments.

3.3 Proposals

3.3.1 Responding firm shall respond to this RFP with a proposal. One (1) original and two (2) copies of the proposal shall be submitted to the District in a sealed package and clearly marked: " Mission Oaks Recreation & Park District - District Office Reroof"

3.3.2 All proposals must be submitted at the following address by the date and time identified in the Proposals Due on page 2.

Attn: J.R. Hichborn, Parks Superintendent
Mission Oaks Recreation and Park District
3344 Mission Avenue
Carmichael, CA 95608

3.4 Proposal Preparation, Interview and Negotiation Costs

The District shall not be responsible for and/or shall not pay any costs associated with the preparation, proposal, or presentation of any proposal, or costs incurred by the responding firms during the interview and negotiations phase of the solicitation process.

3.5 Proposal Withdrawal

To withdraw a proposal, the responding firm must submit a written request, signed by an authorized representative, to the RFP Coordinator. After withdrawing a previously submitted proposal, the responding firm may submit another proposal at any time up to the deadline for submitting proposals.

3.6 Proposal Amendment

The District shall not accept any amendments, revisions, or alterations to the proposal after the deadline for the proposal.

3.7 Proposal Errors

Responding firms are liable for all errors or omissions contained in their proposal. Responding firms shall not be allowed to alter proposal documents after the deadline for submitting a proposal.

3.8 Incorrect Proposal Information

If the District determines that a responding firm has provided, for consideration in the evaluation process or contract negotiations, incorrect information which the responding firm knew or should have known was materially incorrect, the proposal may be rejected in the District's sole discretion.

3.9 Prohibition of Respondent Terms and Conditions

A responding firm may not submit the firm's own contract terms and conditions in a response to this RFP. If a proposal contains such terms and conditions, the District, at its sole discretion, may reject the proposal, unless the proposed terms are in accordance with Section 5.2.1.6 below.

3.10 Assignment and Subcontracting

3.10.1 List of subcontractors must be provided with original bid.

3.10.2 Notwithstanding the use of approved subcontractor / subconsultant, the selected firm(s), if awarded a contract under this RFP, shall be the prime contractor and shall be responsible for all work performed.

3.11 Proposal of Alternate Services

Proposals of alternate services (i.e., proposals that offer something different from that requested by the RFP) will be considered non-responsive and rejected.

3.12 Proposal of Additional Services

If a responding firm indicates the capability and offers services in addition to those required by and described in this RFP, these additional services may be added to the contract before contract signing, at the sole discretion of the District. The cost for any such additional services shall be mutually agreed upon by the selected firm(s) and the District and incorporated into the contract before contract signing.

3.13 Insurance

The apparent successful responding firm will be required to provide proof of insurance as set forth in the attached Standard Contract prior to commencing work.

3.14 Licensure and Special Certification

Before a contract pursuant to this RFP is signed, the selected firm(s) must hold all

necessary applicable business and professional licenses, and certifications. The District may require any or all responding firms to submit evidence of proper licensure and certifications.

3.14.1 Contractor Registration. Pursuant to Labor Code section 1725.5, no contractor or subcontractor may be listed on a bid proposal for a public works project unless registered with the Department of Industrial Relations (DIR) pursuant to Labor Code section 1725.5. No contractor or subcontractor may be awarded a contract for public work on a public works project unless registered with the DIR pursuant to Labor Code section 1725.5. This project is subject to compliance monitoring and enforcement by the DIR.

3.14.2 Prevailing Wages. Responding firms are hereby notified that the DIR has determined the general prevailing rate of wages for each craft, classification, or type of worker needed to execute the work. Copies of the current schedules for California prevailing wages are located on the Department of industrial relations (DIR) website, and the contents of those schedules are included herein as if set forth in full.

3.15 Conflict of Interest and Restrictions

By submitting a proposal, the responding firm certifies that no amount shall be paid directly or indirectly to an employee or official of the District as wages, compensation, or gifts in exchange for acting as an officer, agent, employee, subcontractor, or consultant to the responding firm in connection with the procurement under this RFP.

3.16 RFP Amendment and Cancellation

The District reserves the unilateral right to amend this RFP in writing at any time. The District also reserves the right to cancel or reissue the RFP at its sole discretion. The District shall post copies of the RFP and amendments on the webpage under www.MORPD.com and it shall be the responsibility of the responding firm to monitor the posting of written responses. Responding firms shall respond to the final written RFP and any exhibits, attachments, and amendments.

3.17 Right of Rejection

3.17.1 The District reserves the right, at its sole discretion, to reject any and all proposals or to cancel this RFP in its entirety.

3.17.2 Any proposal received which does not meet the requirements of this RFP may be considered to be non-responsive, and the proposal may be rejected. Responding firms must comply with all of the terms of this RFP and all applicable state and local laws and regulations. The District may reject any proposal that does not comply with all of the terms, conditions, and performance requirements of this RFP.

3.17.3 Responding firms may not restrict the rights of the District or otherwise qualify their proposals. If a responding firm does so, the District may determine the proposal to be a non-responsive counteroffer, and the proposal may be rejected.

3.17.4 The District reserves the right, at its sole discretion, to waive variances in proposals provided such action is in the best interest of the District. Where the District waives variances in proposals, such waiver does not modify the RFP requirements or excuse the responding firm from full compliance with the RFP. Notwithstanding any variance, the District may hold any responding firm to strict compliance with the RFP.

3.18 Disclosure of Proposal Contents

All proposals and other materials submitted in response to this RFP procurement process become the property of the District. Selection or rejection of a proposal does not affect this right. All proposal information, including detailed price and cost information, shall be held in confidence during the evaluation and selection process. Upon the completion of the evaluation and selection process, indicated by approval of a contract for services emanating from this RFP by the District Advisory Board or by rejection of all proposals, the proposals and associated materials shall be open for review by the public to the extent required by the California Public Records Act. By submitting a proposal, the responding firm acknowledges and accepts that the contents of the proposal and associated documents shall become open to public inspection.

3.19 Proprietary Information

The master copy of each proposal shall be retained for official files and will become public record after the award of a contract unless the proposal or specific parts of the proposal can be shown to be exempt by law. Each responding firm may clearly label part of a proposal as "CONFIDENTIAL." In doing so, the responding firm thereby agrees to indemnify and defend the District. The failure to so label any information that is released by the District shall constitute a complete waiver of all claims for damages caused by or related to any release of the information. If a public records request for labeled information is received by the District, the District will endeavor to notify the responding firm of the request and delay access to the material until seven (7) working days after the District's receipt of the public records request. Within that time delay, it will be the duty of the responding firm to act in protection of its labeled information. Failure to so act shall constitute a complete waiver.

3.20 Severability

If any provision of this RFP is declared by a court to be illegal or in conflict with any law, the validity of the remaining terms and provisions shall not be affected, and the rights and obligations of the District and responding firms shall be construed and enforced as if the RFP did not contain the particular provision held to be invalid.

SECTION 4: SPECIAL REQUIREMENTS

4.1 Joint Ventures and Partnering

Proposals from joint ventures or entities partnering for a specific service must be designed to minimize any administrative burden on the District as a result of the participation of multiple entities.

4.1.1 The proposal shall clearly set forth the respective responsibilities and functions that each Principal of the joint venture or partnering entities would perform if awarded a contract pursuant to this RFP.

4.1.2 The proposal must include a copy of the joint venture or partnering agreements that identify the Principals involved, as well as their rights and responsibilities regarding a contract pursuant to this RFP.

4.1.3 The proposal transmittal letter must be signed by each Principal of the joint venture and include all required information.

SECTION 5: STATEMENT OF QUALIFICATIONS FORMAT AND CONTENT

5.1 General Proposal Requirements

5.1.1 The District discourages lengthy and costly proposals. Proposals should be prepared simply and economically and provide a straightforward, concise description of the responding firm's capabilities to satisfy the requirements of this RFP. Emphasis should be on conformity to the District's instructions, requirements of this RFP, and completeness and clarity of content.

5.1.2 Responding firms must follow all formats and address all portions of the RFP set forth herein providing all information requested. Responding firms may retype or duplicate any portion of this RFP for use in responding to the RFP, provided that the proposal clearly addresses all of the District's information requirements.

5.1.3 Responding firms must respond to every subsection under the proposal and fee schedule sections below. Responding firms must label each response to RFP requirements with the section and subsection numbers associated with the subject requirement in this RFP (e.g., the response to the second requirement of the proposal Transmittal Letter would be labeled 5.2.1.2). **Failure to follow the specified format, to label the responses correctly, or to address all of the subsections may, at the District's sole discretion, result in the rejection of the proposal**. Proposals must **not** contain extraneous information. All information presented in a proposal must be relevant in response to a requirement of this RFP, must be clearly labeled and, if not incorporated into the body of the proposal itself, must be referenced to and from the appropriate place within the body of the proposal. Any information not meeting these criteria shall be deemed extraneous and shall in no way contribute to the evaluation process.

5.1.4 Proposals shall be prepared on standard 8 1/2" x 11" paper. Foldouts containing charts, spread sheets, and oversize exhibits are permissible. All responses, as well as any reference material presented, must be written in English. All monetary amounts must be detailed in United States currency. All proposal pages must be numbered. Proposals shall not include unnecessary company advertisement material.

5.2 Proposal

The proposal shall be divided into the following sections:

1. Proposal Transmittal Letter,
2. Mandatory Responding Firm's Qualifications,
3. General Responding Firm's Qualifications and Experience,
4. Technical Project Approach, and
5. Cost Proposal Forms

If a proposal fails to detail and address each of the requirements detailed herein, the District may determine the proposal to be nonresponsive and reject it.

5.2.1 Proposal Transmittal Letter. The proposal must provide a written transmittal and offer of the responding firm in the form of a standard business letter. The Proposal Transmittal Letter shall reference and respond to the following subsections in sequence and attach corresponding documentation as required. Each proposal must meet the Proposal Transmittal Letter requirements and provide all required documentation. A Proposal Transmittal Letter is mandatory and failure to provide the information as required may result in the proposal being considered nonresponsive and rejected.

5.2.1.1 The letter shall state that the proposal remains valid for at least sixty (60) working days subsequent to the proposal due date and thereafter in accordance with any resulting contract between the responding firm and the District.

5.2.1.2 The letter shall provide the complete name of the individual or the firm making the proposal.

5.2.1.3 The letter shall provide the name, mailing address, and telephone number of the person the District should contact regarding the proposal.

5.2.1.4 The letter shall state whether the responding firm intends to use subcontractors. If so, clearly identify the names of the subcontractors/sub-consultants along with complete mailing addresses and the scope and portions of the work the subcontractors / sub-consultants shall perform. **(NOTE: The selected firm(s) must obtain written approval from the District prior to the use of any subcontractors / sub-consultants)**.

5.2.1.5 The letter shall state whether the responding firm or any individual who shall perform work under the contract has a possible conflict of interest and, if so, the nature of that conflict. The District reserves the right to cancel an award if

any interest disclosed from any source could either give the appearance of a conflict of interest or cause speculation as to the objectivity of the offertory. Such determination regarding any questions of conflict of interest shall be solely within the discretion of the District.

5.2.1.6 The letter shall also include a statement of acknowledgement that the District's *Standard Contract* (Section 10) has been reviewed and accepted with or without qualification. If qualifications are involved, those items requiring adjustment or modification must be identified and listed along with suggested modifications to the contract. If no modifications to the Contract are noted, then the District will assume that the responding firm is capable of performing all normal managerial tasks and services without reservation or qualification to the contract.

5.2.1.7 The letter shall be signed by a company officer empowered to bind the responding firm to the provisions of this RFP and any contract awarded pursuant to it. If said individual is not the company president, the letter shall attach evidence showing authority to bind the company.

5.2.2 Mandatory Responding Firm's Qualifications. Proposals shall provide responses and documentation, as required, establishing that the responding firm has met the Mandatory Responding Firm's Qualifications Requirements (see section 1.2.3). Any proposal which does not meet the mandatory requirements and provide all required documentation may be considered nonresponsive, and the proposal may be rejected.

5.2.3 General Responding Firm's Qualifications and Experience. Proposals shall provide the following information (referencing the subsections in sequence) to evidence the responding firm’s experience in delivering services similar to those required by this RFP:

5.2.3.1 A brief description of the responding firm’s background and organizational history.

5.2.3.2 Years in business.

5.2.3.3 A brief statement of how long the responding firm has been performing the services required by this RFP.

5.2.3.4 Location of office(s) with clear identification of the office(s) from which services will be performed.

5.2.3.5 A description of the responding firm’s number of employees, longevity, client base.

5.2.3.7 Form of business (i.e., individual, sole proprietor, corporation, non-profit corporation, partnership, joint venture, Limited Liability Company, etc.).

5.2.3.8 A statement as to whether there is any pending litigation against the responding firm, and if such litigation exists, attach an opinion of counsel as to whether the pending litigation will impair the responding firm's performance in a contract under this RFP.

5.2.3.9 A statement as to whether, in the last ten (10) years, the responding firm has filed (or had filed against it) any bankruptcy or insolvency proceeding, whether voluntary or involuntary, or undergone the appointment of a receiver, trustee, or assignee for the benefit of creditors, and, if so, an explanation providing relevant details.

5.2.3.10 A list, if any, of all current contractual relationships with the District and all those completed within the previous five-(5) year period.

(NOTE: Current or prior contracts with the District are NOT a prerequisite to being awarded the maximum available points for the responding firm's Qualifications and Experience category. The existence of such current or prior contractual relationships will not automatically result in the addition or deduction of evaluation points. Any such current or prior contractual relationships shall be generally considered in awarding the responding firm Qualifications and Experience category points.)

5.2.3.11 A brief descriptive statement indicating the responding firm's credentials to deliver the services sought under this RFP.

5.2.3.12 Describe in detail a maximum of ten (10) public sector or similar projects maintained in the last five (5) years that demonstrates the following:

- Experience performing tasks listed in Section 1.2.1 of the RFP.

  Limit: One project per page.

5.2.3.13 Describe in detail, work that the responding firm has directly performed on a maximum of four (4) minimum two (2) projects that shows:

- A demonstrated ability to implement roofing needs of a municipality or special district.

- A demonstrated ability to meet project deadlines, major milestone, and overall project schedule.

Limit: One page per project.

5.2.3.14 Provide a matrix referencing work performed relative to projects listed indicating key personnel responsible for performance and the extent of their involvement in the project. Differentiate which work

was performed by subcontractor/sub-consultant, if subcontractor/sub-consultant are proposed.

5.2.3.15 An organizational chart highlighting the key people who shall be assigned to accomplish the work required by this RFP and illustrating the lines of authority and designate the individual responsible for the completion of each service component and deliverable of the RFP.

5.2.3.16 A narrative description of the proposed project team, its members and organizational structure; identify the primary contact person who will lead the day-to-day work effort and serve as the primary contact to the District on a day-to-day basis.

5.2.3.17 A personnel roster and resumes of key people who shall be assigned by the responding firm and its subcontractors/sub-consultants who will be performing duties or services under the contract. Resumes shall detail each individual's title, education, current position with the responding firm or subcontractor/sub-consultant. Identify the duration of employment with the responding firm and other firms for each person listed. Describe the relevant experience and education, professional licenses, and demonstrated accomplishments of these key staff members.

5.2.3.18 Proposals shall include a list of proposed staffing levels intended to service this contract. Failure of the responding firm to provide agreed upon equipment inventories and staffing levels, adjusted proportionally to growth over the term of the agreement, shall constitute material breach by the responding firm.

5.2.4 Technical Project Approach. Describe the operational or organizational approach to fulfilling the scope of work/ contract intent

Responding firm must provide a comprehensive narrative on how to accomplish required objectives and provide continuity on work efforts.

SECTION 6: COST PROPOSAL

6.1 A Cost Proposal (Exhibit A) Must be Submitted in a Separately Sealed Envelope.

6.1.1 The responding firm shall provide the following information to allow for the review of the hourly rates for the proposed services:

6.1.1.1 Provide a Schedule of Values for the responding firm and proposed subcontractors/sub-consultants, including rates for each service.

6.1.1.2 It is the District's intent to negotiate a fixed fee “not to exceed” contract for mutually agreed upon services. The selected firm will bill separately for the contracted services based on a schedule of values of tasks performed or on a time and materials basis for extra work not to exceed the negotiated fee for each specific unit of work.

SECTION 7: EVALUATION, CONSULTANT SELECTION, AND CONTRACT AWARD

7.1 Proposal Evaluation Categories and Maximum Points

The categories that shall be considered in the evaluation of proposals are Bid Cost and Technical Project Approach determined by a final interview comprised of the district “project committee”. The maximum points that shall be awarded for each of these categories are:

CATEGORIES	MAXIMUM POINTS POSSIBLE
Bid Amount	60
Technical Project Approach (Final interview)	40

7.2 Proposal Evaluation Process

7.2.1 The evaluation process is designed to award the procurement to the responding firm with the best combination of attributes based upon the evaluation criteria listed in Section 7.1.

7.2.2 The RFP Coordinator shall manage the proposal evaluation process and maintain proposal evaluation records. The evaluation team members shall be responsible for evaluating proposals.

7.2.3 All proposals shall be reviewed by the RFP Coordinator to determine compliance with basic proposal requirements as specified in this RFP.

7.2.4 The evaluation team shall evaluate responsive proposals. Each evaluator shall score the General Responding Firm's Technical Project Approach section of each proposal. The evaluation scoring shall use the pre-established evaluation criteria and weights set out in this RFP. Each evaluator shall use only whole numbers for scoring proposal.

7.2.5 The District reserves the right, at its sole discretion, to request clarifications of proposals or to conduct discussions for the purpose of clarification with any or all responding firms. The purpose of any such discussions shall be to ensure full

understanding of the proposal. Discussions shall be limited to specific sections of the proposal identified by the District and, if held, shall be after initial evaluation of the proposal. If clarifications are made as a result of such discussion, the responding firm shall put such clarifications in writing.

7.2.6 Upon completion of proposal evaluation scoring by the evaluation team, the RFP Coordinator shall calculate the average proposal score for each proposal.

7.2.7 The Qualified firms will be interviewed and rated. The District reserves the right, at its sole discretion, to request interviews. The interviews will be limited to an hour. Interviews will consist of oral panel questions and company presentations. Time slots for the interviews will be assigned by District staff. Consideration will be given to firms with significant driving time requirements. The interviews will be held at the District Office located at 3344 Mission Avenue Carmichael, CA 95608.

The interview should be led by the individual identified by the responding firm who will be the primary contact with the District on a day-to-day basis and if possible, members of the proposed team.

7.2.8 The District reserves the right to select a qualified firm offering the best value to the District, based on that firm's overall qualifications and cost proposal. The selected firm may not necessarily be the firm with the lowest cost proposal.

7.3 Contract Award Process

7.3.1 The District may invite the selected firm to participate in contract negotiations with the District, as the need arises.

7.3.2 If a firm fails to sign and return the contract drawn pursuant to this RFP and final contract negotiations within seven (7) working days of its delivery to the firm, the District may determine, at its sole discretion, that the firm is nonresponsive to the terms of this RFP.

7.3.3 If the District determines that the firm is nonresponsive, the District reserves the right to negotiate with the next highest-ranked selected firm(s).

7.3.4 The RFP files shall be made available for public inspection immediately following contract approval or rejection of all proposals.

SECTION 8: STANDARD CONTRACT INFORMATION

8.1 Contract Approval

The RFP and the consultant selection processes do **not** obligate the District and do **not** create rights, interests, or claims of entitlement in the apparent best evaluated responding firm or any potential consultant or sub-consultant. Contract award and District obligations pursuant thereto shall commence **only** after the contract is signed by the authorized representative of the selected firm(s) and the District.

8.2 Contract Payments

Contract payments shall be made in accordance with the Payment Terms and Conditions provision of the final contract. No payment shall be made until the contract is approved. Under no conditions shall the District be liable for payment of any type associated with the contract or responsible for any work done by the consultant, even work done in good faith and even if the consultant is orally directed to proceed with the delivery of services, if it occurs before the contract start date specified by the contract or before contract approval by District Advisory Board.

8.3 RFP and Proposal Incorporated into Final Contract

This RFP and the successful proposal emanating from the RFP negotiation process shall be incorporated into the final contract.

8.4 Contract Monitoring

The selected firm(s) shall be responsible for the completion of all work set out in the contract. All work is subject to inspection, evaluation, and acceptance by the District. The District may employ all reasonable means to ensure that the work is progressing and being performed in compliance with the contract. At reasonable times, the District may inspect those areas of the selected firm's place of business that are related to the performance of the contract. If the District requires such an inspection, the selected firm(s) shall provide reasonable access and assistance.

8.5 Contract Amendment

During the course of this contract, the District may request the selected firm(s) to perform additional work for which the selected firm(s) would be compensated. That work shall be within the general scope of this RFP. In such instances, the District shall provide the selected firm(s) a written description of the additional work, and the selected firm(s) shall submit a time schedule for accomplishing the additional work and a price for the additional work based on the rates included in the selected firm’s fee schedule to this RFP or a lump sum fixed fee that is mutually agreeable to the District and the selected firm(s), whichever is lowest. If the District and the selected firm(s) reach an agreement regarding the work and associated compensation, said agreement shall become effective by means of a contract amendment.

SECTION 9: SPECIFICATIONS

9.1 Specifications

The Mission Oaks Recreation & Park District (“the District”), is seeking the services of qualified firm for the implementation of a comprehensive Roofing package.

The project shall consist of all necessary items to reroof the district office per specification and manufacturers details.

The purpose of this Request for Proposals (RFP) is to identify and retain a qualified contractor for the installation of a new roof system as specified for the MORPD District Office.

9.2 District Locations

- Mission Oaks Recreation & Parks District Office

SECTION 10: WRITTEN WORK PLAN

Proposals shall all include a written work plan, per the instructions included.

10.1 Additional Requirements

SECTION 11 PROPOSAL FORM

PROPOSAL TO: **MISSION OAKS RECREATION AND PARK DISTRICT**

FOR THE SERVICES OF: **District Office Reroof**

Company Name:_____

Business Address:

_____

Contact Name: _____

Phone No. _____

Contact Email:

_____

TO THE GOVERNING BODY OF THE

MISSION OAKS RECREATION AND PARK DISTRICT

The undersigned contractor, being fully familiar with the terms of the Contract Documents, local conditions affecting the performance of the contract, the character, quality, quantities, and scope of the work, and the cost of the work at the place where the work is to be done, hereby proposes and agrees to perform within the time stipulated in the contract, including all of its component parts and everything required to be performed, and to furnish any and all of the labor, material, tools, equipment, transportation, services, permits, utilities, and all other items necessary to perform the contract and complete in a workmanlike manner, all of the work required in connection with the construction of said work all in strict conformity with the plans and specifications and other contract documents, including Addenda set forth for the prices hereinafter set forth as follows:

ADDENDA NO.	DATE ISSUED
_____	_____
_____	_____
_____	_____

The undersigned as bidder, declares that the only persons or parties interested in this proposal as principals are those named herein; that this proposal is made without collusion with any person, firm, or corporation; and he proposes and agrees, if the proposal is accepted, that he will execute a contract with the MORPD in the form set forth in the Contract Documents and that he will accept in full payment thereof the following prices, to wit:

PROPOSAL FORM
MISSION OAKS RECREATION AND PARK DISTRICT
FOR

TO: Mission Oaks Recreation & Parks District, acting by and through its Governing Board, herein called "Owner".

1. Pursuant to and in compliance with your Notice Inviting Bids and other documents relating thereto, the undersigned bidder, having familiarized himself with the terms of the Contract, the local conditions affecting the performance of the Contract, the cost of the work at the place where the work is to be done, with the Drawings and Specifications, and other Contract Documents, hereby proposes and agrees to perform within the time stipulated, the Contract, including all of its component parts, and everything required to be performed, including its acceptance by the Owner, and to provide and furnish any and all labor, materials, tools, expendable equipment, and utility and transportation services necessary to perform the Contract and complete all of the Work in a workmanlike manner required in connection with the construction of:

MISSION OAKS RECREATION & PARKS DISTRICT

2. (BASE BID) - TOTAL CASH PURCHASE PRICE IN WORDS & NUMBERS

_____DOLLARS

($ _____)

Unit Prices

Unit-1 Replacement of Dryrot wood decking $_____ per sqft

Unit-2 Replacement of Dryrot wood fascia $_____ per sqft

UNSCHEDULED WORK	UNIT	AMOUNT PER UNIT
Project Manager	Hour	
Foreman	Hour	
Laborer	Hour	

3. TIME FOR COMPLETION: The Owner may give a notice to proceed within ninety (90) days of the award of the bid by the Owner. Once the Contractor has received the notice to proceed, the Contractor shall complete the work in the time specified in the Agreement. By submitting this bid, Contractor has thoroughly studied this Project and agrees that the Contract Time for this Project is adequate for the timely and proper completion of the Project. Further, Contractor has included in the analysis of the time required for this Project, and the requisite time to complete Punch List.

   In the event that the Owner desires to postpone giving the notice to proceed beyond this ninety (90) day period, it is expressly understood that with reasonable notice to the Contractor, giving the notice to proceed may be postponed by the Owner. It is further expressly understood by the Contractor, that the Contractor shall not be entitled to any claim of additional compensation as a result of the postponement of giving the notice to proceed.

   It is understood that the Owner reserves the right to reject any or all bids and/or waive any irregularities or informalities in this bid or in the bid process. The Contractor understands that it may not withdraw this bid for a period of ninety (90) days after the date set for the opening of bids.

4. Attached is bid security in the amount of not less than ten percent (10%) of the bid: Bid bond (10% of the Bid), certified check, or cashier's check (circle one)

5. The required List of Designated Subcontractors is attached hereto.

6. The required Non-Collusion Declaration is attached hereto.

7. The bidders acknowledgment of the project schedule is attached hereto.

8. The Substitution Request Form, if applicable, is attached hereto.

9. It is understood and agreed that if written notice of the acceptance of this bid is mailed, telegraphed, or delivered to the undersigned after the opening of the bid, and within the time this bid is required to remain open, or at any time thereafter before this bid is withdrawn, the undersigned will execute and deliver to the Owner a Contract in the form attached hereto in accordance with the bid as accepted, and that he or she will also furnish and deliver to the Owner the Performance Bond and Payment Bond, all within five (5) calendar days after award of Contract, and that the work under the Contract shall be commenced by the undersigned bidder, if awarded the Contract, by the start date provided in the Owner's Notice to Proceed, and shall be completed by the Contractor in the time specified in the Contract Documents.

10. The names of all persons interested in the foregoing proposal as principals are as follows:

_____

_____

_____

_____

_____

11.

(IMPORTANT NOTICE: If bidder or other interested person is a corporation, state the legal name of such corporation, as well as the names of the president, secretary, treasurer, and manager thereof; if a co-partnership, state the true names of the firm, as well as the names of all individual co-partners comprising the firm; if bidder or other interested person is an individual, state the first and last names in full.)

13. PROTEST PROCEDURES. If there is a bid protest, the grounds shall be submitted as set forth in the Instructions to Bidders.

14. The undersigned bidder shall be licensed and shall provide the following California Contractor's license information:

License Number: _____

License expiration date: _____

Name on License: _____

Class of License: _____

DIR Registration Number: _____

15.

If the bidder is a joint venture, each member of the joint venture must include the above information.

16. Time is of the essence regarding this Contract, therefore, in the event the bidder to whom the Contract is awarded fails or refuses to post the required bonds and return executed copies of the Agreement form within five (5) calendar days from the date of receiving the Notice of Award, the Owner may declare the bidder's bid deposit or bond forfeited as damages.

17. The bidder declares that he/she has carefully examined the location(s) of the proposed Project, that he/she has examined the Contract Documents, including the Plans, Addenda, Specifications, and all other documents contained in the Project Manual, and read the accompanying instructions to bidders, and hereby proposes and agrees, if this proposal is accepted, to furnish all materials and do all work required to complete the said work in accordance with the Contract

Documents, in the time and manner therein prescribed for the unit cost and lump sum amounts set forth in this Bid Form.

I agree to receive service of notices at the e-mail address listed below.

I the below-indicated bidder, declare under penalty of perjury that the information provided and representations made in this bid are true and correct.

_____
Proper Name of Company

_____
Name of Bidder Representative

_____
Street Address

_____
City, State, and Zip

( )_____
Phone Number

( )_____
Fax Number

_____
E-Mail

By: _____ Date:_____
Signature of Bidder Representative

NOTE: If bidder is a corporation, the legal name of the corporation shall be set forth above together with the signature of authorized officers or agents and the document shall bear the corporate seal; if bidder is a partnership, the true name of the firm shall be set forth above, together with the signature of the partner or partners authorized to sign contracts on behalf of the partnership; and if bidder is an individual, his / her signature shall be placed above. All signatures must be made in permanent blue ink.

PROPOSAL FORM
MISSION OAKS RECREATION AND PARK DISTRICT
FOR

MISSION OAKS RECREATION AND PARK DISTRICT

Bidder hereby submits the following list of contact names and phone numbers for three (3) or more agencies for whom the Bidder has constructed similar projects.

_____

_____

_____

_____

_____

_____

_____

Pursuant to the requirements of California Business and Professions Code Section 7028.15(e), a bid submitted to the MORPD by a CONTRACTOR who is not licensed pursuant to Chapter 9 of Division 3 of the Business and Professions Code shall be considered nonresponsive and shall be rejected as provided for by law.

Signature of Bidder: _____

Printed Name: _____

Title: _____

Company: _____

Dated: _____, 2024.

NOTE: If bidder is a corporation, the legal name of the corporation shall be set forth above, together with the signature of the officer or officers authorized to sign contracts on behalf of the corporation and the corporate seal; if bidder is a partnership, the true name of the firm shall be set forth above, together with the signature of the partner or partners authorized to sign contracts on behalf of the partnership; if the bidder is an individual, his signature shall be placed above; if the bidder is a joint venture, the name of the joint venture shall be set forth above with the signature of an authorized representative of each venturer.

NON-COLLUSION DECLARATION

The undersigned declares:

I am the _____ of _____, the party making the foregoing bid.

The bid is not made in the interest of, or on behalf of, any undisclosed person, partnership, company, association, organization, or corporation. The bid is genuine and not collusive or sham. The Bidder has not directly or indirectly induced or solicited any other bidder to put in a false or sham bid. The Bidder has not directly or indirectly colluded, conspired, connived, or agreed with any bidder or anyone else to put in a sham bid, or to refrain from bidding. The Bidder has not in any manner, directly or indirectly, sought by agreement, communication, or conference with anyone to fix the bid price of the Bidder or any other bidder, or to fix any overhead, profit, or cost element of the bid price, or of that of any other bidder. All statements contained in the bid are true. The Bidder has not, directly or indirectly, submitted his or her bid price or any breakdown thereof, or the contents thereof, or divulged information or data relative thereto, to any corporation, partnership, company, association, organization, bid depository, or to any member or agent thereof, to effectuate a collusive or sham bid, and has not paid, and will not pay, any person or entity for such purpose.

Any person executing this declaration on behalf of a bidder that is a corporation, partnership, joint venture, limited liability company, limited liability partnership, or any other entity, hereby represents that he or she has full power to execute, and does execute, this declaration on behalf of the Bidder.

I declare under penalty of perjury under the laws of the State of California that the foregoing is true and correct and that this declaration is executed on _____, [date] at _____, [City] _____. [State]

_____

[*Signature of Bidder*]

PAYMENT BOND

(CALIFORNIA PUBLIC WORK)

KNOW ALL MEN BY THESE PRESENTS:

THAT WHEREAS, the _____ DISTRICT (sometimes referred to hereinafter as "Obligee") has awarded to _____ (hereinafter designated as the "Principal" or "Contractor"), an agreement for the work described as follows: _____ (hereinafter referred to as the "Public Work"); and

WHEREAS, said Contractor is required to furnish a bond in connection with said Contract, and pursuant to California Civil Code Section 9550;

NOW, THEREFORE, We, _____, the undersigned Contractor, as Principal; and _____, a corporation organized and existing under the laws of the State of _____, and duly authorized to transact business under the laws of the State of California, as Surety, are held and firmly bound unto the _____ DISTRICT and to any and all persons, companies, or corporations entitled by law to file stop notices under California Civil Code Section 9100, or any person, company, or corporation entitled to make a claim on this bond, in the sum of _____ Dollars ($_____), such sum being not less than one hundred percent (100%) of the total amount payable by said Obligee under the terms of said Contract, for which payment will and truly to be made, we bind ourselves, our heirs, executors and administrators, successors and assigns, jointly and severally, firmly by these presents.

THE CONDITION OF THIS OBLIGATION IS SUCH that if said Principal, its heirs, executors, administrators, successors, or assigns, or subcontractor, shall fail to pay any person or persons named in Civil Code Section 9100; or fail to pay for any materials, provisions, or other supplies, used in, upon, for, or about the performance of the work contracted to be done, or for any work or labor thereon of any kind, or for amounts due under the Unemployment Insurance Code, with respect to work or labor thereon of any kind; or shall fail to deduct, withhold, and pay over to the Employment Development Department, any amounts required to be deducted, withheld, and paid over by Unemployment Insurance Code Section 13020 with respect to work and labor thereon of any kind, then said Surety will pay for the same, in an amount not exceeding the amount herein above set forth, and in the event suit is brought upon this bond, also will pay such reasonable attorneys' fees as shall be fixed by the court, awarded and taxed as provided in California Civil Code Section 9550 et seq.

This bond shall inure to the benefit of any person named in Civil Code Section 9100 giving such person or his/her assigns a right of action in any suit brought upon this bond.

It is further stipulated and agreed that the Surety of this bond shall not be exonerated or released from the obligation of the bond by any change, extension of time for performance, addition, alteration or modification in, to, or of any contract, Plans, or specifications, or agreement pertaining or relating to any scheme or work of improvement herein above described; or pertaining or relating to the furnishing of labor, materials, or equipment therefor; nor by any change or modification of any terms of payment or extension of time for payment pertaining or relating to any scheme or work of improvement herein above described; nor by any rescission or attempted rescission of the contract, agreement or bond; nor by any conditions precedent or subsequent in the bond attempting to limit the right of recovery of claimants

otherwise entitled to recover under any such contract or agreement or under the bond; nor by any fraud practiced by any person other than the claimant seeking to recover on the bond; and that this bond be construed most strongly against the Surety and in favor of all persons for whose benefit such bond is given; and under no circumstances shall the Surety be released from liability to those for whose benefit such bond has been given, by reason of any breach of contract between the Obligee and the Contractor or on the part of any obligee named in such bond; that the sole condition of recovery shall be that the claimant is a person described in California Civil Code Section 9100, and who has not been paid the full amount of his or her claim; and that the Surety does hereby waive notice of any such change, extension of time, addition, alteration or modification herein mentioned.

IN WITNESS WHEREOF this instrument has been duly executed by the Principal and Surety above named, on the_____ day of _____, 20___.

PRINCIPAL/CONTRACTOR:

_____

By: _____

SURETY:

_____

By: _____
Attorney-in-Fact

IMPORTANT: THIS IS A REQUIRED FORM.

Surety companies executing bonds must possess a certificate of authority from the California Insurance Commissioner authorizing them to write surety insurance defined in California Insurance Code Section 105, and if the work or project is financed, in whole or in part, with federal, grant or loan funds, Surety's name must also appear on the Treasury Department's most current list (Circular 570 as amended).

Any claims under this bond may be addressed to:

(Name and Address of Surety)	(Name and Address of agent or representative for service for service of process in California)
_____	_____
_____	_____
Telephone:_____	Telephone: _____

STATE OF CALIFORNIA)
) ss.
COUNTY OF)

On _____ before me, _____, a Notary Public in and for said State, personally appeared _____, who proved to me on the basis of satisfactory evidence to be the person(s) whose name(s) is/are subscribed to the within instrument as the Attorney-in-Fact of the _____ (Surety) and acknowledged to me that he/she/they subscribed the name of the _____ (Surety) thereto and his own name as Attorney-in-Fact on the executed instrument.

I certify under PENALTY OF PERJURY under the laws of the State of California that the foregoing paragraph is true and correct.

WITNESS my hand and official seal.

_____
Notary Public in and for said State

Commission expires:_____

NOTE: A copy of the power-of-attorney to local representatives of the bonding company must be attached hereto.

PERFORMANCE BOND

(CALIFORNIA PUBLIC WORK)

KNOW ALL MEN BY THESE PRESENTS:

THAT WHEREAS, the _____ DISTRICT (sometimes referred to hereinafter as "Obligee") has awarded to _____ (hereinafter designated as the "Principal" or "Contractor"), an agreement for the work described as follows: _____ (hereinafter referred to as the "Public Work"); and

WHEREAS, the work to be performed by the Contractor is more particularly set forth in that certain contract for said Public Work dated _____ _____, (hereinafter referred to as the "Contract"), which Contract is incorporated herein by this reference; and

WHEREAS, the Contractor is required by said Contract to perform the terms thereof and to provide a bond both for the performance and guaranty thereof.

NOW, THEREFORE, we, _____, the undersigned Contractor, as Principal, and _____, a corporation organized and existing under the laws of the State of _____, and duly authorized to transact business under the laws of the State of California, as Surety, are held and firmly bound unto the _____ DISTRICT in the sum of _____ Dollars ($_____), said sum being not less than one hundred percent (100%) of the total amount payable by said Obligee under the terms of said Contract, for which amount well and truly to be made, we bind ourselves, our heirs, executors, administrators, successors, and assigns, jointly and severally, firmly by these presents.

THE CONDITION OF THIS OBLIGATION IS SUCH THAT, if the bounded Contractor, his or her heirs, executors, administrators, successors or assigns, shall in all things stand to and abide by, and well and truly keep and perform the covenants, conditions, and agreements in said Contract and any alteration thereof made as therein provided, on his or her part, to be kept and performed at the time and in the manner therein specified, and in all respects according to their intent and meaning; and shall faithfully fulfill guarantees of all materials and workmanship; and indemnify, defend and save harmless the Obligee, its officers and agents, as stipulated in said Contract, then this obligation shall become null and void; otherwise it shall be and remain in full force and effect.

The Surety, for value received, hereby stipulates and agrees that it shall not be exonerated or released from the obligation of this bond (either by total exoneration or pro tanto) by any change, extension of time, alteration in or addition to the terms of the

contract or to the work to be performed there under or the specifications accompanying the same, nor by any change or modification to any terms of payment or extension of time for any payment pertaining or relating to any scheme of work of improvement under the contract. Surety also stipulates and agrees that it shall not be exonerated or released from the obligation of this bond (either by total exoneration or pro tanto) by any overpayment or underpayment by the Obligee that is based upon estimates approved by the Architect. The Surety stipulates and agrees that none of the aforementioned changes, modifications, alterations, additions, extension of time or actions shall in any way affect its obligation on this bond, and it does hereby waive notice of any such changes, modifications, alterations, additions or extension of time to the terms of the contract, or to the work, or the specifications as well notice of any other actions that result in the foregoing.

Whenever Principal shall be, and is declared by the Obligee to be, in default under the Contract, the Surety shall promptly either remedy the default, or shall promptly take over and complete the Contract through its agents or independent contractors, subject to acceptance and approval of such agents or independent contractors by Obligee as hereinafter set forth, in accordance with its terms and conditions and to pay and perform all obligations of Principal under the Contract, including, without limitation, all obligations with respect to warranties, guarantees and the payment of liquidated damages; or, at Obligee's sole discretion and election, Surety shall obtain a bid or bids for completing the Contract in accordance with its terms and conditions, and upon determination by Obligee of the lowest responsible bidder, arrange for a contract between such bidder and the Obligee and make available as Work progresses (even though there should be a default or succession of defaults under the contract or contracts of completion arranged under this paragraph) sufficient funds to pay the cost of completion less the "balance of the Contract Price" (as hereinafter defined), and to pay and perform all obligations of Principal under the Contract, including, without limitation, all obligations with respect to warranties, guarantees and the payment of liquidated damages. The term "balance of the Contract price," as used in this paragraph, shall mean the total amount payable to Principal by the Obligee under the Contract and any modifications thereto, less the amount previously paid by the Obligee to the Principal, less any withholdings by the Obligee allowed under the Contract. Obligee shall not be required or obligated to accept a tender of a completion contractor from the Surety.

Surety expressly agrees that the Obligee may reject any agent or contractor which may be proposed by Surety in fulfillment of its obligations in the event of default by the Principal. Unless otherwise agreed by Obligee, in its sole discretion, Surety shall not utilize Principal in completing the Contract nor shall Surety accept a bid from Principal for completion of the work in the event of default by the Principal.

No final settlement between the Obligee and the Contractor shall abridge the right of any beneficiary hereunder, whose claim may be unsatisfied.

The Surety shall remain responsible and liable for all patent and latent defects that arise out of or relate to the Contractor's failure and/or inability to properly complete the

Public Work as required by the Contract and the Contract Documents. The obligation of the Surety hereunder shall continue so long as any obligation of the Contractor remains.

Contractor and Surety agree that if the Obligee is required to engage the services of an attorney in connection with enforcement of the bond, Contractor and Surety shall pay Obligee's reasonable attorneys' fees incurred, with or without suit, in addition to the above sum.

In the event suit is brought upon this bond by the Obligee and judgment is recovered, the Surety shall pay all costs incurred by the Obligee in such suit, including reasonable attorneys' fees to be fixed by the Court.

IN WITNESS WHEREOF, we have hereunto set our hands and seals this _____ day of _____, 20___.

PRINCIPAL/CONTRACTOR:

_____

By: _____

SURETY:

_____

By: _____
Attorney-in-Fact

The rate of premium on this bond is _____ per thousand.

The total amount of premium charged: $_____ (This must be filled in by a corporate surety).

IMPORTANT: THIS IS A REQUIRED FORM.

Surety companies executing bonds must possess a certificate of authority from the California Insurance Commissioner authorizing them to write surety insurance defined in California Insurance Code Section 105, and if the work or project is financed, in whole or in part, with federal, grant or loan funds, Surety's name must also appear on the Treasury Department's most current list (Circular 570 as amended).

Any claims under this bond may be addressed to:

(Name and Address of Surety)	(Name and Address of agent or representative for service for service of process in California)
_____	_____
_____	_____
Telephone:_____	Telephone: _____

STATE OF CALIFORNIA)
) ss.
COUNTY OF)

On _____, before me, _____, a Notary Public in and for said State, personally appeared _____, who proved to me on the basis of satisfactory evidence to be the person(s) whose name(s) is/are subscribed to the within instrument as the Attorney-in-Fact of the _____ (Surety) and acknowledged to me that he/she/they subscribed the name of the _____ (Surety) thereto and his own name as Attorney-in-Fact on the executed instrument.

I certify under PENALTY OF PERJURY under the laws of the State of California that the foregoing paragraph is true and correct.

WITNESS my hand and official seal.

_____
Notary Public in and for said State

Commission expires:_____

NOTE: A copy of the power-of-attorney to local representatives of the bonding company must be attached hereto.

GUARANTEE

Guarantee for _____. We hereby guarantee that the _____, which we have installed in _____ _____ has been done in accordance with the Contract Documents, including without limitation, the drawings and specifications, and that the work as installed will fulfill the requirements included in the bid documents. The undersigned and its surety agrees to repair or replace any or all such work, together with any other adjacent work, which may be displaced in connection with such replacement, that may prove to be defective in workmanship or material within a period of (5) <u>five years</u> from the date of the Notice of Completion of the above-mentioned structure by the _____ District, ordinary wear and tear and unusual abuse or neglect excepted.

In the event the undersigned or its surety fails to comply with the above-mentioned conditions within a reasonable period of time, as determined by the Owner, but not later than ten (10) days after being notified in writing by the Owner or within forty-eight (48) hours in the case of an emergency or urgent matter, the undersigned and its surety authorizes the Owner to proceed to have said defects repaired and made good at the expense of the undersigned and its surety, who will pay the costs and charges therefor upon demand. The undersigned and its surety shall be jointly and severally liable for any costs arising from the Owner's enforcement of this Guarantee.

	Countersigned
_____	_____
(Proper Name)	(Proper Name)
By: _____	By: _____
_____	_____
(Signature of Subcontract or Contractor)	(Signature of General Contractor if for Subcontractor)

Representatives to be contacted for service:

Name: _____

Address: _____ Phone Number:_____

CONTRACTOR'S CERTIFICATE REGARDING
WORKERS' COMPENSATION FORM

Labor Code Section 3700 in relevant part provides:

Every employer except the State shall secure the payment of compensation in one or more of the following ways:

1. By being insured against liability to pay compensation by one or more insurers duly authorized to write compensation insurance in this State.

2. By securing from the Director of Industrial Relations a certificate of consent to self-insure, which may be given upon furnishing proof satisfactory to the Director of Industrial Relations of ability to self-insure and to pay any compensation that may become due to employees.

3. For any county, city, city and county, municipal corporation, public Owner, public agency, or any political subdivision of the state, including each member of a pooling arrangement under a joint exercise of powers agreement (but not the state itself), by securing from the Director of Industrial Relations a certificate of consent to self-insure against workers' compensation claims, which certificate may be given upon furnishing proof satisfactory to the director of ability to administer workers' compensation claims properly, and to pay workers' compensation claims that may become due to its employees. On or before March 31, 1979, a political subdivision of the state which, on December 31, 1978, was uninsured for its liability to pay compensation, shall file a properly completed and executed application for a certificate of consent to self-insure against workers' compensation claims. The certificate shall be issued and be subject to the provisions of Section 3702.

I am aware of the provisions of Labor Code Section 3700 which require every employer to be insured against liability for workers' compensation or to undertake self-insurance in accordance with the provisions of that code, and I will comply with such provision before commencing the performance of the work of this Contract.

_____
(Signature)

_____
(Print)

_____
(Date)

In accordance with Article 5 (commencing at section 1860), Chapter 1, Part 7, Division 2 of the Labor Code, the above certificate must be signed and submitted with the Contractor's bid.

DESIGNATION OF SUBCONTRACTORS

In compliance with the Subletting and Subcontracting Fair Practices Act (California Public Contract Code Sections 4100 et seq.,) and any amendments thereof, each Bidder shall set forth below: (a) the name, license number, and location of the place of business of each subcontractor who will perform work or labor or render service to the Contractor, who will perform work or labor or work or improvement to be performed under this Contract, or a subcontractor licensed by the State of California who, under subcontract to the Contractor, specially fabricates and installs a portion of the work or improvements according to detailed drawings contained in the Plans and Specifications in an amount in excess of one-half of one percent of the Contractor's total bid; and (b) the portion and description of the work which will be done by each subcontractor under this Act. The Contractor shall list only one subcontractor for each such portion as is defined by the Contractor in this bid. All subcontractors shall be properly licensed by the California State Licensing Board.

If a Contractor fails to specify a subcontractor, or if a Contractor specifies more than one subcontractor for the same portion of work to be performed under the Contract in excess of one-half of one percent of the Contractor's total bid, the Contractor shall be deemed to have agreed that the Contractor is fully qualified to perform that portion, and that the Contractor alone shall perform that portion.

No Contractor whose bid is accepted shall (a) substitute any subcontractor, (b) permit any subcontractor to be voluntarily assigned or transferred or allow the relevant portion of the work to be performed by anyone other than the original subcontractor listed in the original bid, or (c) sublet or subcontract any portion of the work in excess of one-half of one percent of the Contractor's total bid where the original bid did not designate a subcontractor, except as authorized in the Subletting and Subcontracting Fair Practices Act.

Subletting or subcontracting of any portion of the work in excess of one-half of one percent of the Contractor's total bid where no subcontractor was designated in the original bid shall only be permitted in cases of public emergency or necessity, and then only after a finding, reduced to writing as a public record, of the authority awarding this Contract setting forth the facts constituting the emergency or necessity.

NOTE: If alternate bids are called for and bidder intends to use different or additional subcontractors on the alternates, a separate list of subcontractors must be provided for each such Alternate.

DESIGNATION OF SUBCONTRACTORS FORM

Scope of Work	Name of Subcontractor	Location & Place of Business	DIR #	License Type and Number

Proper Name of Bidder:

Date:

Name:

Signature of Bidder Representative:

Address:

Phone:

*BIDDER'S ACKNOWLEDGEMENT OF PROJECT SCHEDULE

The undersigned acknowledges that he/she has carefully and thoroughly reviewed the Project Schedule, attached herein, and made a part of the Contract Documents.

The undersigned fully understands the manpower requirements necessary to complete the project in accordance with the Project Schedule, and agrees to furnish all labor, materials and equipment necessary, upon (OWNER) acceptance of bidder's proposal, to fully comply with this schedule. The undersigned agrees to comply with any and all adjustments to schedule, as may be directed by the Construction Manager, and which may be required to ensure project completion as stipulated in the Contract Documents.

The undersigned acknowledges that failure to comply with the above could result in delays to other contractors, whose bona fide and substantiated cost impacts, due to said delays, may be borne by the undersigned.

ACKNOWLEDGED AND AGREED:

DATE:_____ _____

CONTRACTOR

By:_____

Specifications

SECTION 01 11 00

SUMMARY OF WORK

PART 1 — GENERAL

1.1 WORK REQUIRED BY CONTRACT DOCUMENTS

A. Drawings and general provisions of the Contract, including the Conditions of the Contract and Division 01 Specification Sections apply to this Section.

B. The work of this project consists of, but is not limited to the Scope of Work listed below. This scope is preliminary and for information purposes only. It is the responsibility of the contractor to perform all work as shown, specified and required based upon the contract documents. (drawings, specifications, addenda, etc.) Contractor is responsible for permits, toilet, fencing and all necessary safety equipment.

C. 1.2 SUMMARY

A. Section includes removal and replacement of the existing roofing systems as specified with all applicable details for a complete watertight warrantied roofing assembly per the manufacturer's instructions. Contractor responsible for all required permits. Building will be occupied; proper fencing will be needed to ensure safe access to occupants.

B. Related Work Specified Elsewhere:

1. Section 06 - Rough Carpentry

2. Section 07 – Concrete Tile Roofing

3. Section 07 – KEE-Stone Hybrid Roofing

4. Section 07 - Sheet Metal Flashing and Trim

1.3 WORK COVERED BY CONTRACT DOCUMENTS

A. Project Identification: Mission Oaks Recreation & Parks District Reroof

B. Project Location: 3344 Mission Ave Carmichael, CA 95608

C. Owner: Mission Oaks Recreation & Parks District

D. General scope of work but not limited to;

1. <u>Low Slope Roof Section:</u>

2. Includes removal and disposal of existing roofing system(s), flashings, copings, etc. for a complete prepared roof surface at both the low and steep slope areas. Gutters and downspouts are to be reused.

3. Install one layer of rosin paper mechanically attached over the entire wood roof deck.

4. Raise all HVAC curbs to 8" at final roof height.

5. Install one layer of ½" Densdeck Prime board with screws and plates, 16 per 4'x 8' sheet.

6. Install one layer of Stressbase 80 in Greenlock Adhesive at all horizontal surfaces.

7. Install KEE Stone FB 60 membrane adhered at all horizontal surfaces in KEE-Lock Spatter Spray per manufactures details.

8. Install KEE Stone NF 60 membrane adhered at all vertical surfaces per manufactures details.

9. KEE- Stone system to lap upslope ~18" and be properly tied into the concrete tile roof section. A 12" reverse hemmed sheet metal flashing set into butyl sealant is to be used to separate the two roofing systems.

10. Install new roof to wall counterflashing.

11. Install new lead boots at all pipe penetrations.

12. Install new vents at all locations and incorporate into the roof system per manufacturers details.

13. Install rubber equipment support blocking at the pipe support locations.

14. <u>Tile Roof Section:</u>

15. Includes removal and disposal of existing roofing system(s), insulation board, drains, flashings, copings, etc. for a complete prepared roof surface at both the low and steep slope areas. Gutters and Downspouts to be reused.

16. Install one layer of Terra Seal Mechanically attached. Install two layers of Terra Seal on the Western low slope roof section as shown in attachment.

17. Install new redwood battens.

18. Install new 4lb lead boots at all pipe penetrations.

19. Install new vents at all locations and incorporate into the roof system per manufacturers details. Paint new vents to match existing.

20. Install 8 new low profile roof vents and incorporate into the roof system painted to match tile.

21. Install new Eagle Malibu, Color Kona Red, Concrete tiles and all necessary details to ensure watertight roof system.

22. Install rubber equipment support blocking at the pipe support locations.

1.4 WORK COMPLETED BY THE DISTRICT

A. No work will be completed by the district.

1.5 TYPE OF CONTRACT

A. Work will be completed under a single prime contract.

1.6 USE OF PREMISES

A. General: Contractor will have limited use of premises for construction operations.

B. Use of site: Limit use of premises to work areas required. Do not disturb portions of the project site beyond areas in which the work is indicated.

C. The building interior is off limits to the contractor. All access shall be from the exterior.

D. The point of exterior access must be approved by the owner.

E. Entrances: Keep all entrances serving the building clear and available to the owner, owner's employees, and emergency vehicles.

F. Use of existing building: Maintain existing building in a weather tight condition throughout the construction period. Repair damage caused by construction operations. Protect building and occupants during construction.

G. Vehicle Parking: Contractor parking is available on site and will need to be approved by the owner.

H. Assume full responsibility for protection and safekeeping of materials stored on premises. Coordinate the location of materials and equipment to be stored on premises. Provide barricades, barriers, and enclosures as required to ensure safety.

1.7 OWNERS OCCUPANCY REQUIREMENTS

A. The owner will occupy the building during the entire construction phase. Cooperate with the owner during construction operations to minimize owner conflicts and facilitate owner usage. Perform the work as to not interfere with owners operations.

B. A minimum of 72 hours notice is needed for all activities that will affect the owners operations.

1.8 WORK RESTRICTIONS

A. On site work hours: Work shall generally be performed from the hours of 7:00 am – 5:00 pm Monday through Friday except as otherwise indicated or approved by the owner.

1. Weekend hours, early morning hours, utility shut down, and noisy activity requires owner's authorization a minimum of 72 hours in advance.

1.9 UNIT PRICES

A. The following unit prices will be used to add or deduct from the total contract amount.

a. Unit-1 Replacement of dryrot wood roof decking, add a line items per square foot cost to proposal form.

b. Unit-2 Replacement of dryrot wood fascia board, add a line item per square foot cost to proposal form.

1.10 SCHEDULE OF ALTERNATES

A. None

1.11 PROJECT CONDITIONS

A. Proceed with roofing work only when existing and forecasted weather conditions will permit a unit of work to be installed in accordance with manufacturer's recommendations and warranty requirements.

B. Do not apply roofing insulation or membrane to damp deck surface.

C. Do not expose materials subject to water or solar damage in quantities greater than can be weatherproofed during same day.

1.12 SEQUENCING AND SCHEDULING

A. Sequence installation of roofing with related units of work specified in other sections to ensure that roof assemblies, including roof accessories, flashing, trim and joint sealers, are protected against damage from effects of weather, corrosion and adjacent construction activity.

B. Complete all roofing field assembly work each day. Phased construction will not be accepted

1.14 PROJECT TIME LINE

A. Pre Bid Meeting: 12/9/2025 @9:00am

B. Last Day for Questions: 12/12/2025 @ 2:00pm

C. Bid Date: 12/19/2025 @2:00pm

E. Project Start Date: TBD

F. Project Completion Date: 5/1/2026

END OF SECTION 01 11 00 – SUMMARY OF WORK

SECTION 06 10 00
ROUGH CARPENTRY

PART 1 - GENERAL

1.1 RELATED DOCUMENTS:

A. Drawings and general provisions of Contract, including General and Supplementary Conditions and other Division-1 Specification sections, apply to work of this section.

B. Related work specified elsewhere:

1. Division 01: Summary of Work

2. Division 07: Modified KEE Membrane Roofing

3. Division 07: Sheet Metal Flashing and Trim

1.2 SUMMARY:

A. This portion of the specification sets forth the general requirements, including the quality and type of materials required for the installation of all pressure treated and non pressure treated lumber used for wood curbs, nailing strips, miscellaneous blocking material, unexposed fillers, fascia, edging strips, deck replacement, etc

1.3 STORAGE:

A. All material specified herein shall be stored (after delivery to the site) so that it will be fully protected from damage and weather, and shall be stacked to prevent damage. All lumber shall be fully protected to maintain the original required moisture content as specified in item titled "Moisture Content".

1.4 OTHER REQUIREMENTS:

A. Dimensions indicated on the drawings are nominal dimensions (except where details show actual sizes) and shall be subject to the standard reductions required for surfacing or tolerances permitted by the grading rules. Unless otherwise indicated on drawings, all material shall be S4S (surfaced four sides).

1.5 PROTECTION:

A. All finished work shall be adequately protected against damage from any source.

1.6 COORDINATION:

A. Carpenters shall coordinate their work with that of the other trades so that progress continues without interruption.

PART 2 - PRODUCTS

2.1 WOOD - FRAMING AND CURBS:

A. GRADING RULES, GRADES, AND SPECIES

1. Lumber: Southern Pine, yellow pine, Douglas fir, spruce, ponderosa pine, larch or Hemlock and shall meet the following minimum grade requirement of construction standard (75% #1 and 25% #2); free from warping and visible decay. Lumber shall be graded according to the standard grading rules of the Southern Pine Inspection Bureau, the West Coast Lumber Inspection Bureau, or the Western Wood Products Association.

B. MOISTURE CONTENT

1. All lumber shall be air-dried or kiln-dried before treatment, so that the moisture content is not more than 19%. After treatment, it shall be kiln-dried at temperatures not exceeding 160 degrees F. (71 degrees C) so that the moisture content is not more than 19% at time of shipment

C. DECAY-RESISTANT TREATMENT:

1. Lumber in contact with roofing or acting as fascias, and all other exterior lumber, shall be pressure-treated with a waterborne preservative in accordance with AWPA Specification P5. Creosote and oil-borne preservatives are not acceptable.

2. Treating processes, material conditions, plant equipment, and other pertinent requirements shall conform to AWPA Specifications C1 and C2 for specific kind of lumber and type of preservative to be used. Retention shall be as required for intended use.

3. All treated lumber shall bear the mark of a code recognized third party agency such as the AWPA.

D. PLYWOOD:

Grade: CDX or Cyme exterior Grade. Description: 5/8" thick

E. WOOD SIDING:

1. T 111 or approved equal.

2.2 MECHANICAL FASTENERS:

A. WOOD TO STEEL:

1. Acceptable Manufacturers:
   a. Roofgrip screw with Climaseal coating; plastic disc - Buildex Div. of ITW, Itasca, IL.
   b. Dekfast screw with Sentri coating: plastic disc – Construction Fasteners, Inc., Wyomissing, PA.

c. Fabco Fastening Systems, West Newton, PA: Insul-Fixx screw with Fabcote coating; plastic plate, Plate-Fixx screw with Fabcote coat; plastic disc.
d. Kwik-Deck screw with Oxyseal coating; plastic disc - Atlas Bolt & Screw Div., Trans Union Fastener Corp., Ashland, OH.
e. Olympic #12-11 Standard Steel Deck Screw or #14-10 Heavy Duty All Purpose Screw with CR-10 coating; three inch diameter plastic - Olympic Manufacturing Group, Inc., Agawam, MA.
f. Glasfast (plastic disc) - Owens-Corning Fiberglas Corp., Toledo, OH.
g. Perma Fastener screw with permaseal coating; plastic plate - International Permalite, Inc., Oak Brook, IL.

2. Screw Length: Sufficient to engage steel, wood deck 1 inch.

B. WOOD TO WOOD:

1. Type: Galvanized, common, annular ring nail. Length: Sufficient to penetrate underlay blocking 1-1/4 inches.

2. Acceptable Manufacturers:

a. Hillwood Manufacturing Co., Cleveland, OH.
b. Independent Nail, Inc., Bridgewater, MA.
c. W.H. Maze Co., Peru, IL.
d. National Nail Corp., Grand Rapids, MI.

C. WOOD TO MASONRY:

1. Acceptable Manufacturers:

a. Tapcon 1/4" diameter, Phillips pan head anchor - Buildex Div. of ITW, Itasca, IL.
b. Confas - Construction Fasteners, Inc., Wyomissing, PA.
c. Con-fixx - Fabco Fastening Systems, West Newton, PA.
d. #14-10 Heavy Duty all Purpose Screw – Olympic Manufacturing Group, Inc., Agawam, MA.
e. Tru-Fast fastener (stainless steel) - The Tru-Fast Corp., Bryan, OH.

2. Length: Sufficient to provide 1-1/2 inch embedment.

.

D. WOOD TO HOLLOW MASONRY:

1. Acceptable Manufacturers:

a. Sleeve Anchor by Hilti Fastening Systems, Tulsa, OK.
b. Rawly Hollow Masonry Anchor by the Rawlplug Co., Inc., New Rochelle, NY.

2. Length: As recommended by manufacturer

PART 3 - EXECUTION

3.1 CARPENTRY:

A. At roof edge to receive metal fascia, around all roof top penetration perimeters, and under any flashing component that is to have a roof flange mechanically fastened to roofing substrate; mechanically attach wood blocking. Blocking thickness: Equal to common 1 x 4”, 1 x 6” 2x4”, 2x6”, 2x8”, 2x10”, 2x12”.

B. Fasteners shall be installed in two rows staggered. Spacing in any one row shall not exceed 24 inches. Within eight feet of outside corners, spacing shall not exceed twelve inches in any one row.

C. Where required, offset blocking layers twelve inches, weave corners.

D. When preservative treated wood is cut, the cut end shall be treated in accordance with AWPA Specification M4.

E. Lumber shall be accurately cut to the work requirements and shall be well fastened.

F. Bolted fastenings shall have washers of adequate size under both heads and nuts. Nails shall be of correct size and quantity for proper fastening. Oversized nails that will result in splitting shall not be used. All fasteners shall be galvanized per ASTM A 153.

END OF SECTION

SECTION 07 32 00
CONCRETE ROOF TILE

PART 1 GENERAL

1.1 SECTION INCLUDES

A. Concrete tile roofing.

B. Vented roof deck construction for tile roofing.

1.2 RELATED SECTIONS

A. Section 06 10 00 - Rough Carpentry.

B. Section 07 60 00 - Flashing and Sheet Metal.

1.3 REFERENCES

A. ASTM International (ASTM):
1. ASTM A 641 - Standard Specification for Zinc-Coated (Galvanized) Carbon Steel Wire.
2. ASTM C 1492 - Standard Specification for Concrete Roof Tile.
3. ASTM D 226 - Standard Specification for Asphalt-Saturated Organic Felt Used in Roofing and Waterproofing; 1997a.
4. ASTM D 249 - Standard Specification for Asphalt Roll roofing (Organic Felt) Surfaced with Mineral Granules: 1989 (reapproved 1996).
5. ASTM D 1970 - Standard Specification for Self-Adhering Polymer Modified Bituminous Sheet Materials Used as Steep Roofing Underlayment for Ice Dam Protection.
6. ASTM D 2626 - Standard Specification for Asphalt-Saturated and Coasted Organic Felt Base Sheet Used in Roofing; 1997b.
7. ASTM D 4798 - Standard Practice for Accelerated Weathering Test Conditions and Procedures for Bituminous Materials (Xenon-Arc Method).
8. ASTM D 4869 - Standard Specification for Asphalt-Saturated Organic Felt Underlayment Used in Steep Slope Roofing.

B. CAN/CSA-A220. 1-Series-06 Concrete Roof Tiles.

C. City of Los Angeles Research Report - LA RR 25021.

D. FRSA/TRI - Concrete and Clay Roof Tile Installation Manual Fourth Edition (For Outside HVHZ Wind Zones).

E. High Wind Applications: Florida Refer RAS 118, 119, 120.

F. ICC ESR 1900 (ICC-ES) International Code Council Evaluation Services.

G. ICC ESR 2015P Concrete and Clay Roof Tile Installation Manual for Moderate Climate Regions.

H. ICC AC 180 - Acceptance Criteria for Clay and Concrete Roof Tiles. August 2007.

I. ICC ER ESR 1787 Flex Seal, Flex Flash, Flex Vent.

J. Tile Roofing Institute (TRI) - Concrete and Clay Design Criteria for Cold and Snow Regions.

1.4 DESIGN REQUIREMENTS

A. Roofing tile materials and installation shall conform to the requirements of ICC ESR 1900 and LA RR 25021, and the 2015P Tile Roofing Institute Manual.

B. Roofing tile materials and installation shall conform to the requirements of the Applicable Building Code.

1.5 SUBMITTALS

A. Submit under provisions of Section 01 30 00 - Administrative Requirements.

B. Product Data: Manufacturer's data for each product to be used including:
   1. Preparation instructions and recommendations.
   2. Storage and handling requirements and recommendations.
   3. Installation methods.

C. Shop Drawings: Indicate metal flashing profiles, joint locations, fastening locations and installation details. Indicate tile layout with location of cut and special shaped tiles identified.

D. Selection Samples: For each finish product specified, submit samples indicating manufacturer's full range of available colors and patterns.

E. Verification Samples: Submit two representative samples of each material specified indicating visual characteristics and finish. Include range samples if variation of finish is anticipated.

F. Certificates of Compliance: Submit to certify compliance with referenced standards.

1.6 QUALITY ASSURANCE

A. Manufacturer Qualifications: Member of the Tile Roofing Institute.

B. Installer Qualifications: License by the local/state authority, and have the proper insurance to operate in your area.

C. Installation: Refer to the Tile Roofing Institute Installation Manual for Moderate Climate Regions ICC-ES ESR 2015P, FRSA/TRI Concrete and Clay Roof Tile Installation Manual Fourth Edition 07-320-8-05 ICC-SSTD-11 or TAS 101 and RAS 118,119,120 for High Wind Zones (HVHZ).

D. Compliance Reports for Eagle Roofing Products, Florida Department of Community Affairs Approved Application #FL7473, Miami Dade NOA's:
   1. ICC-ES ESR 1900.
   2. IBC 2012.
   3. IRC 2012.
   4. Fire Classifications.
   5. Weather Resistance.

6. Wind-uplift Resistance.
7. NOA 11-0321.01 Malibu.
8. NOA 11-0321.03 Capistrano.
9. NOA 12-0430.04 Flat.
10. NOA 11-1011.05 EagleSeal.

E. Product Requirements:
1. Comply with governing codes and regulations. Provide products of acceptable manufacturers, which have been in satisfactory use in similar service for three years.

F. Mock-Up:
1. Provide mock-up as required to demonstrate quality of workmanship.
2. Finish areas designated by Architect.
3. Do not proceed with remaining work until material and workmanship are approved by Architect.
4. Modify mock-up area as required to produce acceptable work.

1.7 DELIVERY, STORAGE, AND HANDLING

A. Deliver, handle, and store materials in accordance with manufacturer's instructions.
1. Refer to the FRSA TRI 07320/8-05 Concrete and Clay Roof Tile Installation Manual Fourth Edition section #1.04.
2. Refer to roof loading guide MC-09 of the Tile Roofing Institute Installation Manual for Moderate Climate Regions ICC-ES ESR 2015P.

B. Store products in manufacturer's unopened packaging until ready for installation.

C. Maintain dry storage area for products of this section until installation of products.

1.8 PROJECT CONDITIONS

A. Anticipate environmental conditions (temperature, humidity, and ventilation) to schedule work within limits recommended by manufacturer for optimum results. Do not install products under environmental conditions outside manufacturer's absolute limits.

1.9 WARRANTY

A. Manufacturer shall warrant the products against manufacturing defects and shall include material and labor to repair or replace defective materials as specified in manufacturer's warranty.
1. Warranty Period - Concrete Roof Tile: Lifetime Transferable Limited Product Warranty for concrete roof tile.
2. Workmanship Warranty- Correct defective workmanship within a five (5) year period after date of substantial completion.

PART 2 PRODUCTS

2.1 MANUFACTURERS

A. Acceptable Manufacturer:
1. Eagle Roofing Products - Rialto: 2352 N. Locust Ave., Rialto, CA 92377. ASD. Tel: (800) 400-3245. Fax: (909) 822-5940. Website: www.eagleroofing.com.
2. Eagle Roofing Products - Stockton: 4555 S. McKinley, Stockton, CA 95206. ASD.

Tel: (800) 998-3245. Fax: (209) 234-4366. Website: www.eagleroofing.com.

3. Eagle Roofing Products - Phoenix: 4602 W. Elwood, Phoenix, AZ 85043. ASD. Tel: (800) 346-5260. Fax: (602) 442-8841. Website: www.eagleroofing.com.
4. Eagle Roofing Products Florida LLC - Sumterville: 1575 E. C R 470, Sumterville, FL 33585. ASD. Tel: (877) 300-3245. Fax: (877) 300-3248. Website: www.eagleroofing.com.

B. Requests for substitutions will be considered in accordance with provisions of Section 01 60 00 - Product Requirements.

2.2 TILE

A. Concrete Roof Tile: As manufactured by Eagle Roofing Products.

B. Standard Concrete Tile:
1. Malibu Profile Tile:
   a. Weight: Standard Weight.
   b. Product Number/Name: Malibu.
   c. Trim Tile: Flat type.
   d. Trim Tile Color: Kona Red
   e. Hip Starters: Flat smooth.
   f. Hip Starters Color: Match Field

2.3 RELATED MATERIALS

A. Eagle Energy Saving Roof:
1. Eave Ventilation: Eagle Roofing Products, Ventilated Bird Stop/Eave Riser.
2. Batten Type: 1 by 2 inch (25 by 50 mm) wood.
3. Ridge Ventilation: Eagle Roofing Products, Flex Vent.

B. Decking: Comply with FRSA/TRI 07320/8.05 Concrete and Clay Tile Installation Manual for Moderate Climate.

C. Underlayment: Self Adhering polymer based sheet complying with ASTM D5148; minimum thickness 75 mils; strippable release paper and slip reistant top surface. Install per manufacturer recommendations. Terra Seal by The Garland Company, local representative: Dan McCready 916-865-7753.

D. Battens:
1. Nominal 1 inch by 2 inches (25 mm by 51 mm) complying with IBC Chapter 23, section 2302.
2. Comply with Section #3.11 pages #16-#17 and #82 of the FRSA/TRI 07320/8-05 Concrete and Clay Roof Tile Installation Manual Fourth Edition.
3. The Riser as manufactured for Eagle Roofing Products, Product Elevating battens off of the roof deck.

E. Rake and Ridge Flashing: Flashing shall be a minimum No. 26 gage Galvanized steel G90 or equal.
1. Standard Metal Rake for Low Profile Tiles:
   a. Color: Black.
   b. Color: Brown.
2. Standard Metal Rake for Flat Profile Tiles:
   a. Color: Black.

b. Color: Brown.

3. Raised Metal Rake Trim for All Profiles, 1-1/2 inches (38 mm):
   a. Color: Black.
   b. Color: Brown.
4. Ridge Weather Block for High Profile Tiles:
   a. Color: Black.
   b. Color: Terracotta.

F. Gable Treatment
1. Underlayment Wrapped Gable:
   a. Extend underlayment beyond rake/gable end. Fold down onto fascia or barge board, minimum of 1 inch (25 mm). Secure with nails and tin tags, round cap nails or other fasteners 6 inches (152 mm) on center.
   b. Trim underlayment at fascia or barge board. Install a peel and stick underlayment extending underlayment beyond rake/gable end. Fold down and seal onto fascia or barge board.

G. Rake/Gable Finish:
1. Rake Gable Tile:
   a. Install first rake tile the exposed length of first course of field tile with factory finish of rake tile towards the eave.
   b. Fasten rake tile with a minimum two 10D nails and /or of sufficient length to penetrate the framing a minimum of 3/4 inch (19 mm).
   c. About each succeeding rake tile to the nose of the field tile above and maintain a constant head lap.
2. Mortar Finish:
   a. Place mortar bed along roof edge.
   b. Point smooth to a straight edge finish.

H. Valley Flashings:
1. No. 24 Gauge (G90) Galvanized 24 inches (610 mm) Flashing.
2. Comply with Tile Roofing Institute Moderate Climate Installation Guide MC 12B.
3. Comply with FRSA/TRI 07320/8-05 Fourth Edition Installation Guide.

I. Wall Trays (Pans) Flashing:
1. No. 24 Gauge (G90) Galvanized minimum 6 inches (152 mm) trough.
2. Comply with Tile Roofing Institute Moderate Climate Installation Guide MC 12B.
3. Comply with FRSA/TRI 07320/8-08 Fourth Edition Installation Guide.

J. Roof to Wall Flashing: No. 24 Gauge (G90) Galvanized or flexible flashing to provide minimum 3 inches (76 mm) coverage.

K. Pipe Flashing:
1. High/Low profile tile flashing - 4 lb. lead, dead soft aluminum or copper.

L. In Wall Counter Flashing:
1. No. 24 Gauge (G90) Galvanized Z-Bar flashing recommended or surface mount ringlet (pin) flashing for reroofing applications.

M. Tile Fasteners:
1. Corrosive resistant fastener meeting ASTM A641 Class I or approved equal. Number 11 gauge diameter and of sufficient length to penetrate 3/4 inch (19 mm) into or

through the thickness of the deck or the batten. Comply with Tile Roofing Institute Moderate Climate Installation Guide Table 1A and 1B.

2. Comply with FRSA/TRI 07320/8-05 Fourth Edition Installation Guide.
3. Screw Fasteners:
   a. Corrosion resistant meeting ASTM A641 Class 1 and/or corrosion resistance equal (according to ASTM B 117). Screws shall be 2-1/2 inches (64 mm) in length or penetrate a minimum 3/4 inch (19 mm) into the deck or batten. ASTM A641 Class 1 is a nail specification that can be converted to screw fasteners through performance testing (ASTM B 117). Each fastener manufacturer is responsible for supplying this support this data. Minimum #8 course thread.
4. High Wind Areas:
   a. Eagle Roofing Products Wind Clips - Low profile, 2-7/8 inches (73 mm).
   b. Eagle Roofing Products Wind Clips - High profile, 3-3/8 inches (86 mm).
   c. Eagle Roofing Products Wind Clips - Flat profile, 2-1/4 inches (57 mm).
   d. Eagle Roofing Products Wind Clips - Flat fascia, 3/4 inch (19 mm).
5. Special Application: Boosted Capistrano Installations.
   a. Wire Ties: Bronze.
   b. Wire Ties: Stainless Steel.

N. Adhesive/Sealant: Tile adhesive formulated for use with concrete roof tile.

O. Ventilation: Per local building code requirement.

PART 3 EXECUTION

3.1 EXAMINATION

A. Examine areas to receive tile to verify conditions. Do not commence tile installation until unsatisfactory conditions are corrected.

3.2 TILE INSTALLATION

A. Install in accordance with manufacturer's instructions and the following standards as applicable to the location of the project:
   1. Tile Roofing Institute Moderate Climate Installation Guide ICC-ES ESR 2015P (TRI Guide).
   2. TRI/WSRCA Standard Installation Guides for Concrete and Clay Tile in Cold Weather Applications.
   3. FRSA/TRI 07320/8-05 Fourth Edition Installation Guide ICC-ES ESR 2015P.
   4. Florida High Wind Applications. RAS 118, 119,120.
   5. CAN/CSA-A220. 1-Series-06 Concrete Roof Tiles.
   6. FRSA/TRI 07320/8-05 Fourth Edition Installation Guide.

B. Roof Layout: Layout according to TRI Guide MC 07, MC 08, MC 08A, MC 09. Roof Layout: Layout according to FRSA/TRI 07320/8-05 Fourth Edition. Refer to section # (3.08, 3.12).

C. Battens: Install according to TRI Guide Table 1, Table 2, Table 3, MC 04 or MC-05, MC 06, MC 06A. FRSA/TRI 073020/8-05 Fourth Edition. Refer to section #3.11 pages 16-17 and 82.

D. Underlayment: Install according to TRI Guide MC 01A, MC 01B and manufacturer's instructions. FRSA/TRI 07320/8-05 Fourth Edition. Quick Reference charts on pages 2, 23,

45, 67 and manufacturer's instructions.

E. Vent Pipes: Install according to TRI Guide MC 02. FRSA/TRI Fourth Edition. See drawings 11,12,12,14 and 11-b, 12-b, and 14-b.

F. Eave/Gable: Install according to MC 10, MC 10A, MC 10B, MC 20, MC 20A. FRSA/TRI 07320/8-05 Fourth Edition. Refer to section 3.03 for eave and refer to sections 3.05, 3.15 and 4.09 for gable.

G. Venting: Install according to TRI Guide MC 21, manufacturer's instructions and local code requirements.

H. Hip and Ridge: Install according to TRI Guide MC 18, MC 18A, MC 18B. FRSA/TRI 07320/8-05 Fourth Edition.

I. Rake: Install according to TRI Guide MC 19, MC 19A, MC 19B. FRSA/TRI 07320/8-05 Fourth Edition, refer to sections 4.09, 3.14 and 3.18.

J. Valleys: Install according to TRI Guide MC 03, MC 03A, MC 17, MC 17A, MC 17B, MC 17C, MC 17D. FRSA/TRI 07320/8-05 Fourth Edition, refer to sections 3.05 and 3.04 drawings 3, 4, 5 and 3b, 4b, 5b.

K. Side Wall Flashing: Install according to TRI Guide MC 12, MC 12A, MC 13, MC 13A. FRSA/TRI 07320/8-05 Fourth Edition drawing 7.

L. Head and Apron Flashing: Install according to TRI Guide MC 11, MC 11A. FRSA/TRI 07320/8-05 Fourth Edition drawings 8, 9, and 10.

M. Chimneys: Install according to TRI Guide MC 14, MC 14A, MC 15, MC 15A.

N. Skylights: Install according to TRI Guide MC 16, MC 16A, MC 16B. Florida. Install in compliance with regular flashing installation procedures. For self curbing or prefabricated skylights, refer to skylight manufacturer's installation instructions.

O. Gutters: Install according to TRI Guide MC 23. Florida install according to manufacturer's instructions and local code requirements.

3.3 SPECIAL APPLICATIONS

A. Slope changes - Refer to TRI Guide MC 22.

B. Pre-Engineered Roof - Metal Deck - Refer to TRI Guide MC 25, MC 25A, MC 25B, MC 25C.

C. Pre-Engineered Roof - Concrete Deck - Refer to TRI Guide MC 26, MC 26A.

D. Pre-Engineered Roof - Wire Attachment - Refer to TRI Guide MC 27, MC 27A, MC 27B.

E. Spaced Sheathing - Refer to TRI Guide Appendix B.

F. Adhesive Fastening - Refer to TRI Guide Appendix B.

G. Adhesive Fastening Set Tile Guidelines;
   1. FRSA/TRI 07320/8-05 Fourth Edition. System four underlayment Option "A". And system Four Underlayment Option "B".

H. Mortar Set Tile Guidelines:
   1. Refer to FRSA/TRI 07320/8-05 System Three.

I. Design for High Wind - Refer to TRI Guide Appendix B. RAS 118, 199,120.

3.4 CLEAN-UP

A. Remove all debris, including any cut dust, from roof daily.

3.5 REPAIR AND REPLACEMENT

A. Comply with requirements of TRI Guide MC 24.

3.6 PROTECTION

A. Protect material and take precautions to prevent other trades from damaging roof materials during and after installation.

END OF SECTION

SECTION 07550
MODIFIED KEE MEMBRANE ROOFING

1.GENERAL

1.1. SECTION INCLUDES

A. Includes all labor, materials, and equipment to install a Cold Applied 2-Ply Thermoplastic Hybrid Roof System roof (KEE-Stone FB 60) over the properly prepared substrate.

B. Includes removal and disposal of existing roofing system(s), insulation board, flashings, sheet metal items, copings, etc. for a complete prepared roof surface to receive the new roofing system.

C. Includes a new cold applied 2-ply hybrid roofing system with all accessories as needed for a complete warrantable roofing system.

D. See section 011100 Summary of Work for a detailed scope of work.

1.2. RELATED SECTIONS

A. Section 01110 – Summary of Work

B. Section 01300 - Submittals

C. Section 06100 - Rough Carpentry

D. Section 07220 - Roof Insulation

E. Section 07620 - Sheet Metal Flashing and Trim

1.3. REFERENCES

A. ASTM C1289 - Standard Specification for Faced Rigid Cellular Polyisocyanurate Thermal Insulation Board.

B. ASTM D 41 - Standard Specification for Asphalt Primer Used in Roofing, Dampproofing, and Waterproofing.

C. ASTM D 312 - Standard Specification for Asphalt used in Roofing.

D. ASTM D 1079 Standard Terminology Relating to Roofing, Waterproofing and Bituminous Materials.

E. ASTM D 1863 Standard Specification for Mineral Aggregate Used as a Protective Coating for Roofing.

F. ASTM D 2822 Standard Specification for Asphalt Roof Cement.

G. ASTM D 5147 Standard Test Method for Sampling and Testing Modified Bituminous Sheet Materials.

H. ASTM D 6754 Standard Specification for Ketone Ethylene Ester (KEE) Sheet Roofing

I. ASTM D 6162 Standard Specification for Styrene Butadiene Styrene (SBS) Modified Bituminous Sheet Materials Using a Combination of Polyester and Glass Fiber Reinforcements.

J. ASTM D 6163 Standard Specification for Styrene Butadiene Styrene (SBS) Modified Bituminous Sheet Materials Using Glass Fiber Reinforcements.

K. ASTM D 6164 - Standard Specification for Styrene Butadiene Styrene (SBS) Modified Bituminous Sheet Materials Using Polyester Reinforcements.

L. ASTM E 108 - Standard Test Methods for Fire Test of Roof Coverings

M. Factory Mutual Research (FM): Roof Assembly Classifications.

N. National Roofing Contractors Association (NRCA): Roofing and Waterproofing Manual.

O. Sheet Metal and Air Conditioning Contractors National Association, Inc. (SMACNA) - Architectural Sheet Metal Manual.

P. Underwriters Laboratories, Inc. (UL): Fire Hazard Classifications.

Q. Warnock Hersey (WH): Fire Hazard Classifications.

R. ANSI-SPRI ES-1 Wind Design Standard for Edge Systems used with Low Slope Roofing Systems.

S. ASCE 7-16, Minimum Design Loads for Buildings and Other Structures

T. UL - Fire Resistance Directory.

U. FM Approvals - Roof Coverings and/or RoofNav assembly database.

V. California Title 24 Energy Efficient Standards.

W. California Code of Regulations, Title 24, Part 2, California Building Code (CBC), International Building Code.

1.4. DESIGN / PERFORMANCE REQUIREMENTS

A. Perform work in accordance with all federal, state and local codes.

B. Exterior Fire Test Exposure: Roof system shall achieve a UL, FM or WH Class rating for roof slopes indicated on the Drawings as follows:
   1. Factory Mutual Class A Rating.
   2. Underwriters Laboratory Class A Rating.
   3. Warnock Hersey Class A Rating.

C. Design Requirements:
   1. Uniform Wind Uplift Load Capacity
      a. Installed roof system shall withstand negative (uplift) design wind loading pressures complying with the following criteria.
         1. Design Code: ASCE 7, Method 2 for Components and Cladding.
         2. Importance Category:
            a. III

3. Importance Factor of:
    a. 1.0
4. Wind Speed: 100 mph
5. Exposure Category:
    a. C
6. Design Roof Height: 20 feet.
7. Minimum Building Width: 48 feet.
8. Roof Pitch: 0.25 :12.
9. Roof Area Design Uplift Pressure:
    a. Zone 1 - Field of roof 17.1 psf
    b. Zone 2 - Eaves, ridges, hips and rakes 26.5 psf
    c. Zone 3 - Corners 33.6 psf

2. Snow Load: N/A psf.
3. Live Load: 20 psf, or not to exceed original building design.
4. Dead Load:
    a. Installation of new roofing materials shall not exceed the dead load capacity of the existing roof structure.

D. Energy Star: Roof System shall comply with the initial and aged reflectivity required by the U.S. Federal Government's Energy Star program.

E. LEED: Roof system shall meet the reflectivity and emissivity criteria to qualify for one point under the LEED credit category, Credit 7.2, Landscape & Exterior Design to Reduce Heat Island - Roof.

F. Roof System membranes containing recycled or bio-based materials shall be third party certified through UL Environment.

G. Roof system shall have been tested in compliance with the following codes and test requirements:
1. Miami-Dade County:
    a. Self-Adhered Membrane Systems Over:
        1. Wood Decks N.O.A.
    b. Torch and Mop Membrane Systems Over
        1. Wood Decks N.O.A.
    c. Roofing Underlayments
        1. Garland Underlayments N.O.A.
    d. Roofing Cements and Coatings
        1. Garland Coatings and Mastics N.O.A.
2. Cool Roof Rating Council:
    a. CRRC Directory: CRRC 0700-0034
3. International Code Council Evaluation Service (ICC-ES):
    a. Membrane Systems
        1. ESR-3460
4. FM Approvals:
    a. RoofNav Website

1.5. SUBMITTALS

A. Submit under provisions of Section 01300.

B. Product Data: Manufacturer's data sheets on each product to be used, including:

1. Preparation instructions and recommendations.
2. Storage and handling requirements and recommendations.
3. Installation instructions.

C. Shop Drawings: Submit shop drawings including installation details of roofing, flashing, fastening, insulation and vapor barrier, including notation of roof slopes, tapered insulation design if applicable, and fastening patterns of insulation and base modified bitumen membrane, prior to job start.

D. Design Pressure Calculations: Submit design pressure calculations for the roof area in accordance with ASCE 7 and local Building Code requirements. Include a roof system attachment analysis report, certifying the system's compliance with applicable wind load requirements before Work begins. Report shall be reviewed by a Professional Engineer registered in the State of the Project who has provided roof system attachment analysis for not less than 5 consecutive years.

E. LEED Submittals: Provide documentation of how the requirements of Credit will be met:
1. List of proposed materials with recycled content. Indicate post-consumer recycled content and pre-consumer recycled content for each product having recycled content.
2. Product data and certification letter indicating percentages by weight of post-consumer and pre-consumer recycled content for products having recycled content.
3. Product reflectivity and emissivity criteria to qualify for one point under the LEED credit category, Credit 7.2, Landscape & Exterior Design to Reduce Heat Island - Roof.

F. Recycled or Bio-Based Materials: Provide third party certification through UL Environment of roof System membranes containing recycled or bio based materials

G. Verification Samples: For each modified bituminous membrane ply product specified, two samples, minimum size 6 inches (150 mm) square, representing actual product, color, and patterns.

H. Provide written certification from the roofing system manufacturer certifying the applicator is currently authorized to install the specified roof system and ability to provide the specified warranty.

I. Sample Warranty: Provide an unexecuted copy of the warranty specified for this project clearly stating the terms required of the owner, contractor, and manufacturer.

J. Manufacturer's Certificates: Provide to certify products meet or exceed specified requirements.

K. Test Reports: Submit test reports, prepared by an independent testing agency, for all modified bituminous sheet roofing, indicating compliance with ASTM D5147.

L. Manufacturer's Fire Compliance Certificate: Certify that the roof system furnished is approved by Factory Mutual (FM), Underwriters Laboratories (UL), Warnock Hersey (WH) or approved third party testing facility in accordance with ASTM E108, Class A for external fire and meets local or nationally recognized building codes.

M. Closeout Submittals: Provide manufacturer's maintenance instructions that include recommendations for periodic inspection and maintenance of all completed roofing work. Provide product warranty executed by the manufacturer. Assist Owner in preparation and

submittal of roof installation acceptance certification as may be necessary in connection with fire and extended coverage insurance on roofing and associated work.

N. Any material submitted as equal to or better than the specified material must be accompanied by a report signed and sealed by a professional engineer licensed in the state in which the installation is to take place. This report shall show that the submitted equal meets the Design and Performance criteria in this specification. Substitution requests submitted without licensed engineer stamp will be rejected for non-conformance.

1.6. QUALITY ASSURANCE

A. Perform Work in accordance with NRCA Roofing and Waterproofing Manual and all manufacturer's instructions.

B. Manufacturer Qualifications: Company specializing in manufacturing products specified with documented ISO 9001 certification and minimum of twelve years of documented experience and must not have been in Chapter 11 bankruptcy during the last five years.

C. Installer Qualifications: Company specializing in performing Work of this section with minimum five years documented experience and a certified Pre-Approved Garland Contractor.

D. Installer's Field Supervision: Maintain a full-time Supervisor/Foreman on job site during all phases of roofing work while roofing work is in progress.

E. Product Certification: Provide manufacturer's certification that materials are manufactured in the United States and conform to requirements specified herein, are chemically and physically compatible with each other, and are suitable for inclusion within the total roof system specified herein.

F. Source Limitations: Obtain all components of roof system from a single manufacturer. Secondary products that are required shall be recommended and approved in writing by the roofing system Manufacturer. Upon request of the Architect or Owner, submit Manufacturer's written approval of secondary components in list form, signed by an authorized agent of the Manufacturer.

1.7. PRE-INSTALLATION MEETINGS

A. Coordinate with installation of associated flashings and counterflashings installed by other sections.

B. Preinstallation Meeting:
1. Convene two weeks before starting work of this section. Meet at Project site with Installer, installer of each component of associated work, installers of deck or substrate construction to receive roofing work, installers of rooftop units and other work in the around roofing that must precede or follow roofing work (including mechanical work if any), Architect/Owner, roofing system manufacturer's representative, and other representatives directly concerned with performance of the Work, including (where applicable) Owner's insurers, test agencies, and governing authorities. Objectives to include:
2. Review preparation and installation procedures and coordinating and scheduling required with related work.
   a. Review methods and procedures related to roofing work.

b. Review structural loading limitations of new deck.
c. Review roofing systems requirements (drawings, specifications, and other contract documents).
d. Review required submittals, both completed and yet to be completed.
e. Review and finalize construction schedule related to roofing work and verify availability of materials, Installer's personnel, equipment, and facilities needed to make progress and avoid delays.
f. Review required inspection, testing, certifying, and material usage accounting procedures.
g. Review weather and forecasted weather conditions and procedures for coping with unfavorable conditions, including provision of temporary roofing over occupied spaces.
h. Record discussion of conference, including decisions and agreements (or disagreements) reached, and furnish copy of record to each party attending. If substantial disagreements exist at conclusion of conference, determine how disagreements will be resolved and set date for reconvening conference.
i. Review notification procedures for weather or non-working days.

C. Sequence installation of roofing with related units of work specified in other sections to ensure that roof assemblies, including roof accessories, flashing, trim, and joint sealers, are protected against damage from effects of weather, corrosion, and adjacent construction activity.

B. Inspect and make notes of job conditions prior to installation:
1. Record minutes of the conference and provide copies to all parties present.
2. Identify all outstanding issues in writing designating the responsible party for follow-up action and the timetable for completion.
3. Installation of roofing system shall not begin until all outstanding issues are resolved to the satisfaction of the Owner and Architect.

1.8. DELIVERY, STORAGE, AND HANDLING

A. Deliver and store products in manufacturer's unopened packaging with labels intact until ready for installation.

B. Store all roofing materials in a dry place, on pallets or raised platforms, out of direct exposure to the elements until time of application. Store materials at least 4 inches above ground level and covered with "breathable" tarpaulins.

C. Stored in accordance with the instructions of the manufacturer prior to their application or installation. Store roll goods on end on a clean flat surface except store KEE-Stone FB 60 rolls flat on a clean flat surface. No wet or damaged materials will be used in the application.

D. Store at room temperature wherever possible, until immediately prior to installing the roll. During winter, store materials in a heated location with a 50 degree F (10 degree C) minimum temperature, removed only as needed for immediate use. Keep materials away from open flame or welding sparks.

E. Avoid stockpiling of materials on roofs without first obtaining acceptance from the Architect/Engineer.

F. Adhesive storage shall be between the range of above 50 degree F (10 degree C) and below 80 degree F (27 degree C). Area of storage shall be constructed for flammable storage.

1.9. COORDINATION

A. Coordinate Work with installing associated metal flashings as work of this section proceeds.

1.10. PROJECT CONDITIONS

A. Maintain environmental conditions (temperature, humidity, and ventilation) within limits recommended by manufacturer for optimum results. Do not install products under environmental conditions outside manufacturer's absolute limits.

B. Do not apply roofing membrane to damp or frozen deck surface or when 40% chance of precipitation is expected or occurring.

C. Proceed with roofing work only when existing and forecasted weather conditions will permit unit of work to be installed in accordance with manufacturer's recommendations and warranty requirements.

D. Do not expose materials vulnerable to water or sun damage in quantities greater than can be weatherproofed the same day.

1.11. WARRANTY

A. Special Project Warranty: Submit roofing Installer's warranty, signed by Installer, covering the Work of this Section, including all components of roofing system such as membrane roofing, base flashing, roof insulation, fasteners, cover boards, substrate boards, vapor retarders (where included), and walkway products, for the following warranty period:
   1. Correct defective Work within a five (5) year period after Date of Substantial Completion.

2.PRODUCTS

2.1. MANUFACTURERS

A. Acceptable Manufacturer: The Garland Company, Inc.; 3800 E. 91st St., Cleveland, OH 44105. Local Representative: Dan McCready Phone: (916) 865-7753. dmccready@garlandco.com Web Site: www.garlandco.com.

B. The Products specified are intended and the Standard of Quality for the products required for this project. If other products are proposed the bidder must disclose in the bid the manufacturer and the products that they intend to use on the Project. If no manufacturer and products are listed, the bid may be accepted only with the use of products specified.
   1. Bidder will not be allowed to change materials after the bid opening date.
   2. If alternate products are included in the bid, the products must be equal to or exceed the products specified. Supporting technical data shall be submitted to the Architect/ Owner for approval prior to acceptance.
   3. In making a request for substitution, the Bidder/Roofing Contractor represents that it has:
      a. Personally investigated the proposed product or method, and determined that it is equal or superior in all respects to that specified.
      b. Will provide the same guarantee for substitution as for the product and method specified.
      c. Will coordinate installation of accepted substitution in work, making such changes as may be required for work to be completed in all respects.

d. Will waive all claims for additional cost related to substitution, which consequently become apparent.
e. Cost data is complete and includes all related cost under his/her contract or other contracts, which may be affected by the substitution.
f. Will reimburse the Owner for all redesign cost by the Architect for accommodation of the substitution.

4. Architect/ Owner reserves the right to be the final authority on the acceptance or rejection of any or all bids, proposed alternate roofing systems or materials that has met ALL specified requirement criteria.
5. Failure to submit substitution package, or any portion thereof requested, will result in immediate disqualification and consideration for that particular contractors request for manufacturer substitution.

2.2. COLD APPLIED 2-PLY ROOF SYSTEM

A. Rosin Sheet: One ply of mechanically attached to the prepared substrate.
   1. Red Rosin Paper:

B. Insulation: As specified in Section 07220 and shown on Drawings.

   1. Insulation assembly; as required to ensure positive drainage and minimum slope of 1/4 inch in 12 inches.

C. Insulation: As specified in Section 07220 and shown on Drawings;
   1. One layer of primed ½" woodfiber insulation board

D. Base (Ply) Sheet: One ply bonded to the prepared substrate with Interply Adhesive (1):
   1. Flexbase 80 Base Sheet (80 mil):

E. Interply Adhesive (1):
   1. Green Lock Plus Membrane Adhesive:

F. Thermoplastic Sheet: One ply bonded to the prepared substrate with Interply Adhesive (2):
   1. KEE Stone FB 60:

G. Interply Adhesive (2):
   1. KEE-Lock Spatter Spray:

H. Base & Wall Flashing (Ply) Sheet: One ply bonded to the prepared substrate with Interply Adhesive (3).

   1. Flexbase 80 Base Sheet (80 mil)

I. Flashing Membrane Adhesive: Adhesive (3)
   1. Green Lock Plus Flashing Adhesive

J. Flashing Membrane Sheet: One ply bonded to the prepared substrate with Adhesive (4):
   1. KEE-Stone NF 60:

K. Flashing Membrane Adhesive: Adhesive (4)
   1. KEE-Lock WB Flashing Adhesive

2.3. ACCESSORIES:

A. Roof Insulation Thermal Value (R), nominal as indicated on drawings and as follows: Provide insulation of thickness required to develop drainage patterns as indicated, as required to eliminate ponding and to meet thermal requirements noted on drawings.

B. Roof Insulation Field Layer: Provide and install one layer of ½" six side primed Blue Ridge Structodek High Density Fiberboard Roof Insulation. ASTM C 208, Type II.

C. Vapor Retarder: Red Rosin Paper; Install layer rosin sheet shingled uniformly to achieve one ply over the entire prepared substrate. Shingle in direction of slope of roof to shed water on each area of roof.
   1. Red Rosin Paper by WR Meadows
      a. Weight – 12 lb./roll
      b. Size – 500 square feet p/roll
      c. 36" wide by 167' long

D. Nails and Fasteners: Non-ferrous metal or galvanized steel, except that hard copper nails shall be used with copper; aluminum or stainless steel nails shall be used with aluminum; and stainless steel nails shall be used with stainless steel, Fasteners shall be self-clinching type of penetrating type as recommended by the deck manufacturer. Fasten nails and fasteners flush-driven through flat metal discs not less than 1 inch (25 mm) diameter. Omit metal discs when one-piece composite nails or fasteners with heads not less than 1 inch (25 mm) diameter are used.

E. Walkway Pads - As recommended and furnished by the membrane manufacturer adhered to control foot traffic on roof top surface and provide a durable system compliant non-slip walkway.
   1. SolarBright Walkway Roll by WPG, A Garland Company.
      a. 30" x 60' walk way roll
      b. Install walk way pads in a path from all roof access points to and around all HVAC and serviceable mechanical equipment, to and around roof hatches, and as designated by the owner.
      c. Walkway Pads shall not be installed over field seams or flashing seams of the membrane.

F. Urethane Sealant Hybrid - Tuff-Stuff MS: One part, non-sag sealant as approved and furnished by the membrane manufacturer for moving joints.
   1. Tensile Strength, ASTM D 412: 250 psi
   2. Elongation, ASTM D 412: 450%
   3. Hardness, Shore A ASTM C 920: 35
   4. Adhesion-in-Peel, ASTM C 92: 30 pli

G. Sealant - Green-Lock Structural Adhesive: Single component, 100% solids structural adhesive as furnished and recommended by the membrane manufacturer.
   1. Elongation, ASTM D 412: 300%
   2. Hardness, Shore A, ASTM C 920: 50
   3. Shear Strength, ASTM D 1002: 300 psi

H. Butyl Tape: 100% solids, asbestos free and compressive tape designed to seal as recommended and furnished by the membrane manufacturer.

I. Glass Fiber Cant - Glass Cant: Continuous triangular cross Section made of inorganic fibrous glass used as a cant strip as recommended and furnished by the membrane

wood nailer every 3 inches (76 mm) o.c. staggered.

6. Strip in flange with KEE Membrane Stripping ply covering entire flange. Assure ply laps do not coincide with metal laps.

D. Scupper Through Wall (Overflow):
   1. Inspect the nailer to assure proper attachment and configuration.
   2. Run one ply over nailer up the overflow, into the scupper hole and up flashing as in typical wall flashing detail. Assure coverage of all wood nailers.
   3. Install scupper box in a 1/4 inch (6 mm) bed of mastic. Assure all box seams are soldered and have a minimum 4 inch (101 mm) flange. Make sure all corners are closed and soldered.
   4. Fasten flange of scupper box every 3 inches (76 mm) o.c. staggered.
   5. Strip in flange scupper box with KEE Stripping ply covering entire area with 6 inch (152 mm) overlap on to the field of the roof and wall flashing.

E. Coping Cap:
   1. Minimum flashing height is 8 inches (203 mm) above finished roof height. Maximum flashing height is 24 inches (609 mm).
   2. Set cant in bitumen. Run all field plies over cant a minimum of 2 inches (50 mm).
   3. Attach tapered board to top of wall.
   4. Install base flashing ply covering entire wall and wrapped over top of wall and down face with 6 inches (152 mm) on to field of roof and set in cold adhesive. Nail membrane at 8 inches (203 mm) o.c.
   5. Install continuous cleat and fasten at 6 inches (152 mm) o.c. to outside wall.
   6. Install new metal coping cap hooked to continuous cleat.
   7. Fasten inside cap 24 inches (609 mm) o.c. with approved fasteners and neoprene washers through slotted holes, which allow for expansion and contraction.

F. Surface Mounted Counterflashing:
   1. Minimum flashing height is 8 inches (203 mm) above finished roof height. Maximum flashing height is 24 inches (609 mm). Prime vertical wall at a rate of 100 square feet per gallon and allow to dry.
   2. Set cant in bitumen. Run all field plies over cant a minimum of 2 inches (50 mm).
   3. Install base flashing ply covering wall set in bitumen with 6 inches (152 mm) on to field of the roof.
   4. Install KEE Membrane ply in adhesive over the base flashing ply, 9 inches (228 mm) on to the field of the roof.
   5. Apply butyl tape to wall behind flashing. Secure termination bar through flashing, butyl tape and into wall. Alternatively use caulk to replace the butyl tape.
   6. Secure counterflashing set on butyl tape above flashing at 8 inches (203 mm) o.c. and caulk top of counterflashing.

G. Curb Detail/Air Handling Station:
   1. Minimum curb height is 8 inches (203 mm) above finished roof height. Set cant in bitumen. Run all field plies over cant a minimum of 2 inches (50 mm).
   2. Install base flashing ply covering curb set in bitumen with 6 inches (152 mm) on to field of the roof.
   3. Install a KEE Membrane ply in adhesive over the base flashing ply, 9 inches (228 mm) on to the field of the roof.
   4. Install pre-manufactured counterflashing with fasteners and neoprene washers or per manufacturer's recommendations.
   5. Set equipment on neoprene pad and fasten as required by equipment manufacturer.

H. Roof Drain:
   1. Plug drain to prevent debris from entering plumbing.
   2. Taper insulation to drain minimum of 24 inches (609 mm) from center of drain.
   3. Install base flashing ply (40 inch square minimum) in bitumen.
   4. Set lead/copper flashing (30 inch square minimum) in 1/4 inch (6 mm) bed of mastic. Run lead/copper into drain a minimum of 2 inches (50 mm). Prime lead/copper at a rate of 100 square feet per gallon and allow to dry.
   5. Run roof system plies over drain. Cut out plies inside drain bowl.
   6. Install modified membrane (48 inch square minimum) in bitumen.
   7. Install clamping ring and assure that all plies are under the clamping ring.
   8. Remove drain plug and install strainer.

I. Plumbing Stack:
   1. Minimum stack height is 12 inches (609 mm).
   2. Run roof system over the entire surface of the roof. Seal the base of the stack with elastomeric sealant.
   3. Set lead/copper flashing in 1/4 inch (6 mm) bed of mastic.
   4. Caulk the intersection of the membrane with elastomeric sealant.
   5. Install KEE Membrane Boot, clamp and seal the top with urethane sealant.

J. Heat Stack:
   1. Minimum stack height is 12 inches (609 mm).
   2. Run roof system over the entire surface of the roof. Seal the base of the stack with elastomeric sealant.
   3. Prime flange of new sleeve. Install properly sized sleeves set in 1/4 inch (6 mm) bed of roof cement.
   4. Install base flashing ply in bitumen.
   5. Install modified membrane in bitumen.
   6. Caulk the intersection of the membrane with elastomeric sealant.
   7. Install new collar over cape. Weld collar or install stainless steel draw brand.

3.7. CLEANING

A. Clean-up and remove daily from the site all wrappings, empty containers, paper, loose particles and other debris resulting from these operations.

B. Remove asphalt markings from finished surfaces.

C. Repair or replace defaced or disfigured finishes caused by Work of this section.

3.8. PROTECTION

A. Provide traffic ways, erect barriers, fences, guards, rails, enclosures, chutes and the like to protect personnel, roofs and structures, vehicles and utilities.

B. Protect exposed surfaces of finished walls with tarps to prevent damage.

C. Plywood for traffic ways required for material movement over existing roofs shall be not less than 5/8 inch (16 mm) thick.

D. In addition to the plywood listed above, an underlayment of minimum 1/2 inch (13 mm) recover board is required on new roofing.

E. Special permission shall be obtained from the Manufacturer before any traffic shall be permitted over new roofing.

3.9. FIELD QUALITY CONTROL

A. Inspection: Provide manufacturer's field observations at start-up and three (3) days per week through project completion. Provide a final inspection upon completion of the Work.
   1. Warranty shall be issued upon manufacturer's acceptance of the installation.
   2. Field observations shall be performed by a representative employed full-time by the manufacturer and whose primary job description is to assist, inspect and approve membrane installations for the manufacturer.
   3. Provide observation reports from the representative indicating procedures followed, weather conditions and any discrepancies found during inspection.
   4. Provide a final report from the representative, certifying that the roofing system has been satisfactorily installed according to the project specifications, approved details and good general roofing practice.

3.10. SCHEDULES

A. Base (Ply) Sheet: Flexbase 80 Base Sheet (80 mil): 80 mil SBS (Styrene-Butadiene-Styrene) rubber modified roofing membrane reinforced with a fiberglass scrim, performance requirements according to ASTM D 6163.
   a. Tensile Strength, ASTM D 5147
      1. 2 in/min. @ 73.4 +/- 3.6 deg. F MD 225 lbf/in XD 225 lbf/in
      2. 50mm/min. @ 23 +/- 2 deg. C MD 8.75 kN/m XD 8.75 kN/m
   b. Tear Strength, ASTM D 5147
      1. 2 in/min. @ 73.4 +/- 3.6 deg. F MD 300 lbf XD 300 lbf
      2. 50mm/min. @ 23 +/- 2 deg. C MD 444.8 N XD 444.8 N
   c. Elongation at Maximum Tensile, ASTM D 5147
      1. 2 in/min. @ 73.4 +/- 3.6 deg. F MD 7.0 % XD 7.0 %
      2. 50mm/min@ 23 +/- 2 deg. C MD 7.0 % XD 7.0 %
   d. Low Temperature Flexibility, ASTM D 5147, Passes -30 deg. F (-28.8 deg. C)

B. Thermoplastic/Modified Cap (Ply) Sheet:
   1. KEE-Stone FB 60: 60 mil thermoplastic, ketone ethylene ester (KEE) roofing membrane with polyester scrim. ASTM D6754
      a. Breaking Strength, ASTM D 751, Proc. B, strip
         1. 375 lbf. (1,668 N)
      b. Tear Strength ASTM D 751
         1. 120 lbf. min. (534 N)
      c. Elongation at Break (%), ASTM D 751, Proc. B, Strip
         1. 40.0%

C. Interply Adhesive's:
   1. Green-Lock Plus Membrane Adhesive: Cold applied solvent free membrane adhesive: zero V.O.C. compliant performance requirements:
      a. Non-Volatile Content ASTM D 4586 100%
      b. Density ASTM D 1475 11.4 lbs./gal. (1.36 g/m3)
      c. Viscosity Brookfield 20,000-50,000 cPs.
      d. Flash Point ASTM D 93 400 deg. F min. (232 deg. C)
      e. Slope: up to 3:12

2. Flashing Ply Adhesive: Green-Lock Plus Flashing Adhesive: Cold applied solvent free flashing adhesive: zero V.O.C.
   a. Non-Volatile Content ASTM D 4586 100%
   b. Density ASTM D 1475 11.8 lbs./gal. (1.17 g/cm3)
   c. Viscosity Brookfield 400,000 cPs.
   d. Flash Point ASTM D 93 400 deg. F min. (232 deg. C) G

3. KEE-Lock Spatter Spray: Dual component, single bead (spatter applied) urethane insulation/membrane adhesive.
   a. Tensile Strength (ASTM D 412) 250 psi
   b. Density (ASTM D 1875) 8.5 lbs./gal.
   c. Viscosity (ASTM D 2556) 22,000 - 60,000 cP
   d. Peel Strength (ASTM D 903) 17 lb./in.
   e. Flexibility (ASTM D 816) Pass @ -70 deg. F (-56.7 deg. C)

4. Flashing Ply Adhesive: KEE-Lock WB Bonding Adhesive: Contact bonding adhesive specifically designed for bonding KEE membranes and flashings to vertical substrates.
   a. Coverage: 1 - 1.5 gal per sq both sides
   b. Color: Blue
   c. VOC: 0 g/l

D. Surfacing:
   1. Flashing Membrane Sheet:
   2. KEE-Stone NF 60 Flashing
      1. Breaking Strength: 375
      2. Tear Strength: 145 x 200
      3. Color: White
      4. Thickness: 60 mil

END OF SECTION

SECTION 07 62 00

SHEET METAL FLASHING AND TRIM

1.GENERAL

1. RELATED DOCUMENTS

A. Drawings and general provisions of the Contract, including General and Supplementary Conditions and Division 01 Specification Sections, apply to this Section.

2. SUMMARY

A. Section Includes:

1. Manufactured through-wall flashing with counterflashing
2. Formed low-slope roof sheet metal fabrications.
3. Formed wall, coping, and soffit sheet metal fabrications.
4. Formed equipment support flashing
5. Surface mounted counter flashing
6. Manufactured reglets and counter flashing
7. Edge metal / gravel stop and cleat flashing
8. Gutters & Downspouts

B. Related Requirements:

1. Division 06 "Rough Carpentry" for wood nailers, curbs, and blocking.
2. Division 07 “Membrane Roofing” for materials and installation of sheet metal flashing and trim integral with roofing.
3. Division 07 “Metal Roofing” for materials and installation of sheet metal flashing and trim integral with roofing.
4. Division 07 "Roof Accessories" for set-on-type curbs, equipment supports, roof hatches, vents, and other manufactured roof accessory units.

3. COORDINATION

A. Coordinate sheet metal flashing and trim layout and seams with sizes and locations of penetrations to be flashed, and joints and seams in adjacent materials.

B. Coordinate sheet metal flashing and trim installation with adjoining roofing and wall materials, joints, and seams to provide leak proof, secure, and noncorrosive installation.

4. PREINSTALLATION MEETINGS

A. Pre Installation Conference: Conduct conference at Project site.

1. Review construction schedule. Verify availability of materials, Installer's personnel, equipment, and facilities needed to make progress and avoid delays.
2. Review special roof details, roof drainage, roof-penetration flashing, equipment curbs, and condition of other construction that affect sheet metal flashing and trim.
3. Review requirements for insurance and certificates if applicable.
4. Review sheet metal flashing observation and repair procedures after flashing installation.

5. SUBMITTALS

A. Product Data: For each type of product.

1. Include construction details, material descriptions, dimensions of individual components and profiles, and finishes for each manufactured product and accessory.

B. Shop Drawings: For sheet metal flashing and trim.

1. Include plans, elevations, sections, and attachment details.
2. Detail fabrication and installation layouts, expansion-joint locations, and keyed details. Distinguish between shop- and field-assembled work.
3. Include identification of material, thickness, weight, and finish for each item and location in Project.
4. Include details for forming, including profiles, shapes, seams, and dimensions.
5. Include details for joining, supporting, and securing, including layout and spacing of fasteners, cleats, clips, and other attachments. Include pattern of seams.
6. Include details of termination points and assemblies.
7. Include details of expansion joints and expansion-joint covers, including showing direction of expansion and contraction from fixed points.
8. Include details of roof-penetration flashing.
9. Include details of edge conditions, including eaves, ridges, valleys, rakes, crickets, and counter flashings as applicable.
10. Include details of special conditions.
11. Include details of connections to adjoining work.
12. Detail formed flashing and trim at scale of not less than 3 inches per 12 inches

C. Samples for Initial Selection: For each type of sheet metal and accessory indicated with factory-applied finishes.

D. Samples for Verification: For each type of exposed finish.

1. Sheet Metal Flashing: 12 inches (300 mm) long by actual width of unit, including finished seam and in required profile. Include fasteners, cleats, clips, closures, and other attachments.

2. Trim, Metal Closures, Expansion Joints, Joint Intersections, and Miscellaneous Fabrications: 12 inches (300 mm) long and in required profile. Include fasteners and other exposed accessories.

6. INFORMATIONAL SUBMITTALS

A. Qualification Data: For fabricator.

B. Product Certificates: For each type of coping and roof edge flashing that is ANSI SPRI ES-1 tested.

C. Product Test Reports: For each product, for tests performed by a qualified testing agency.

D. Sample Warranty: For special warranty.

7. CLOSEOUT SUBMITTALS

A. Maintenance Data: For sheet metal flashing and trim, and its accessories, to include in maintenance manuals.

8. QUALITY ASSURANCE

A. Fabricator Qualifications: Employs skilled workers who custom fabricate sheet metal flashing and trim similar to that required for this Project and whose products have a record of successful in-service performance.

1. For copings and roof edge flashings that are SPRI ES-1 tested, shop shall be listed as able to fabricate required details as tested and approved.

9. DELIVERY, STORAGE, AND HANDLING

A. Do not store sheet metal flashing and trim materials in contact with other materials that might cause staining, denting, or other surface damage. Store sheet metal flashing and trim materials away from uncured concrete and masonry.

B. Protect strippable protective covering on sheet metal flashing and trim from exposure to sunlight and high humidity, except to extent necessary for period of sheet metal flashing and trim installation.

10. WARRANTY

A. Owner shall receive one (1) 30 Year No Dollar Limit warranty from manufacturer of roofing materials covering all of the following criteria. Multiple warranties are not acceptable.

1. Pre-finished metal material shall require a written twenty (20)-year non-prorated warranty covering fade, chalking and film integrity. The material shall not show a

color change greater than 5 NBS color units per ASTM D2244 or chalking excess of 8 units per ASTM D659. If either occurs material shall be replaced per warranty, at no cost to the Owner.

2. Changes: Changes or alterations in the edge metal system without prior written consent from the manufacturer shall render the system unacceptable for a warranty.

3. Warranty shall commence on date of substantial completion or final payment, whichever is agreed by contract.

4. The Contractor shall provide the Owner with a notarized written warranty assuring that all sheet metal work including caulking and fasteners to be watertight and secure for a period of two years from the date of final acceptance of the building. Warranty shall include all materials and workmanship required to repair any leaks that develop, and make good any damage to other work or equipment caused by such leaks or the repairs thereof.

5. Installing roofing contractor shall be responsible for the installation of the edge metal system in general accordance with the membrane manufacturer's recommendations.

6. Installing contractor shall certify that the edge metal system has been installed per the manufacturer's printed details and specifications.

7. One manufacturer shall provide a 30 Year No Dollar Limit Warranty as a single warranty for all accessory metal for flashings, metal edges and copings, along with the warranty for metal roof areas, membrane roof areas, and any transitions between two different material types.

2.PRODUCTS

1. PERFORMANCE REQUIREMENTS

A. General: Sheet metal flashing and trim assemblies shall withstand wind loads, structural movement, thermally induced movement, and exposure to weather without failure due to defective manufacture, fabrication, installation, or other defects in construction. Completed sheet metal flashing and trim shall not rattle, leak, or loosen, and shall remain watertight.

B. Sheet Metal Standard for Flashing and Trim: Comply with NRCA's "The NRCA Roofing Manual" and SMACNA's "Architectural Sheet Metal Manual" requirements for dimensions and profiles shown unless more stringent requirements are indicated.

C. Sheet Metal Standard for Copper: Comply with CDA's "Copper in Architecture Handbook." Conform to dimensions and profiles shown unless more stringent requirements are indicated.

D. SPRI Wind Design Standard: Manufacture and install roof edge flashings tested according to SPRI ES-1 and capable of resisting the following design pressure:

1. Design Pressure: As indicated on Drawings.

E. Thermal Movements: Allow for thermal movements from ambient and surface temperature changes to prevent buckling, opening of joints, overstressing of components, failure of joint sealants, failure of connections, and other detrimental effects. Base calculations on surface temperatures of materials due to both solar heat gain and nighttime-sky heat loss.

1. Temperature Change: 120 deg F (67 deg C), ambient; 180 deg F (100 deg C), material surfaces.

2. COPING

A. The design is based upon roofing systems engineered and manufactured by the Garland Company:

The Garland Company, Inc.
Dan McCready
Telephone: (916) 865-7753
Email: dmccready@garlandco.com

1. General: Product designations for the materials used in this section shall be based on performance characteristics of the R-MER Edge System manufactured by the Garland Company, Cleveland, OH, and shall form the basis of the contract documents.

2. R-Mer Edge Fascia or Extruded Fascia Continuous Cant

a. Zinc-coated steel, ASTM A653, coating designation G-90, in thickness of 0.0299 nom./ 22 gauge, 36" to 48" by coil length, chemically treated, commercial or lock-forming quality.

3. R-Mer Edge Coping Chairs

a. Zinc-coated steel, ASTM A653, coating designation G-90, in thickness of 0.0635 nom./ 16 gauge, 36" to 48" by coil length, chemically treated, commercial or lock-forming quality.

4. R-Mer Edge Fascia/drip edge

a. Zinc-coated steel, ASTM A653, coating designation G-90, in thickness of 22 gauge, 36" to 48" by coil length, chemically treated, commercial or lock-forming quality.

5. R-Mer Edge Coping

a. Zinc-coated steel, ASTM A653, coating designation G-90, in thickness of 22 gauge 36" to 48" by coil length, chemically treated, commercial or lock-forming quality.

3. SHEET METALS

A. General: Protect mechanical and other finishes on exposed surfaces from damage by applying strippable, temporary protective film before shipping.

B. Metallic-Coated Steel Sheet: Provide zinc-coated (galvanized) steel sheet according to ASTM A 653/A 653M, G90 (Z275) coating designation; prepainted by coil-coating process to comply with ASTM A 755/A 755M.

1. Surface: Smooth, flat and with manufacturer's standard clear acrylic coating on both sides.
2. Exposed Coil-Coated Finish:
   a. Two-Coat Fluoropolymer: AAMA 621. Fluoropolymer finish containing not less than 70 percent PVDF resin by weight in both color coat and clear topcoat. Prepare, pretreat, and apply coating to exposed metal surfaces to comply with coating and resin manufacturers' written instructions.

3. Color: Match Architect's sample
4. Concealed Finish: Pretreat with manufacturer's standard white or light-colored acrylic or polyester backer finish, consisting of prime coat and wash coat with minimum total dry film thickness of 0.5 mil (0.013 mm).

4. UNDERLAYMENT MATERIALS

A. Self-Adhering, High-Temperature Sheet: Minimum 45 mils thick, consisting of a slip-resistant polyethylene- or polypropylene-film top surface laminated to a layer of butyl- or SBS-modified asphalt adhesive, with release-paper backing; specifically designed to withstand high metal temperatures beneath metal roofing. Provide primer according to written recommendations of underlayment manufacturer.

1. The Garland Company Inc., 3800 E. 91st Street Cleveland OH 44105; R-Mer Seal self-adhering underlayment. Local Representative: Dan McCready (916) 865-7753 dmccready@garlandco.com
2. Thermal Stability: ASTM D 1970; stable after testing at 240 deg F or higher.
3. Low-Temperature Flexibility: ASTM D 1970; passes after testing at minus 20 deg F or lower.

B. Slip Sheet: Rosin-sized building paper, 3 lb/100 sq. ft. minimum.

5. MISCELLANEOUS MATERIALS

A. General: Provide materials and types of fasteners, solder, protective coatings, sealants, and other miscellaneous items as required for complete sheet metal flashing and trim installation and as recommended by manufacturer of primary sheet metal unless otherwise indicated.

B. Fasteners: Wood screws, annular threaded nails, self-tapping screws, self-locking rivets and bolts, and other suitable fasteners designed to withstand design loads and recommended by manufacturer of primary sheet metal or manufactured item.

1. General: Blind fasteners or self-drilling screws, gasketed, with hex-washer head.

    a. Exposed Fasteners: Heads matching color of sheet metal using plastic caps or factory-applied coating. Provide metal-backed EPDM or PVC sealing washers under heads of exposed fasteners bearing on weather side of metal.
    b. Blind Fasteners: High-strength aluminum or stainless-steel rivets suitable for metal being fastened.
    c. Spikes and Ferrules: Same material as gutter; with spike with ferrule matching internal gutter width.

2. Fasteners for Zinc-Tin Alloy-Coated Stainless-Steel Sheet: Series 300 stainless steel.

C. Solder:

1. For Zinc-Coated (Galvanized) Steel: ASTM B 32, Grade Sn50, 50 percent tin and 50 percent lead or Grade Sn60, 60 percent tin and 40 percent lead with maximum lead content of 0.2 percent.

D. Sealant Tape: Pressure-sensitive, 100 percent solids, polyisobutylene compound sealant tape with release-paper backing. Provide permanently elastic, nonsag, nontoxic, nonstaining tape 1/2 inch wide and 1/8 inch thick.

E. Elastomeric Sealant: ASTM C 920, elastomeric polyurethane polymer sealant; of type, grade, class, and use classifications required to seal joints in sheet metal flashing and trim and remain watertight.

F. Butyl Sealant: ASTM C 1311, single-component, solvent-release butyl rubber sealant; polyisobutylene plasticized; heavy bodied for hooked-type expansion joints with limited movement.

G. Bituminous Coating: Cold-applied asphalt emulsion according to ASTM D 1187.

H. Asphalt Roofing Cement: ASTM D 4586, asbestos free, of consistency required for application.

6. FABRICATION, GENERAL

A. General: Custom fabricate sheet metal flashing and trim to comply with details shown and recommendations in cited sheet metal standard that apply to design, dimensions, geometry, metal thickness, and other characteristics of item required. Fabricate sheet metal flashing and trim in shop to greatest extent possible.

1. Fabricate sheet metal flashing and trim in thickness or weight needed to comply with performance requirements, but not less than that specified for each application and metal.
2. Obtain field measurements for accurate fit before shop fabrication.
3. Form sheet metal flashing and trim to fit substrates without excessive oil canning, buckling, and tool marks; true to line, levels, and slopes; and with exposed edges folded back to form hems.

4. Conceal fasteners and expansion provisions where possible. Do not use exposed fasteners on faces exposed to view.

B. Fabrication Tolerances: Fabricate sheet metal flashing and trim that is capable of installation to a tolerance of 1/4 inch in 20 feet on slope and location lines indicated on Drawings and within 1/8-inch offset of adjoining faces and of alignment of matching profiles.

C. Expansion Provisions: Form metal for thermal expansion of exposed flashing and trim.

1. Form expansion joints of intermeshing hooked flanges, not less than 1 inch deep, filled with butyl sealant concealed within joints.
2. Use lapped expansion joints only where indicated on Drawings.

D. Sealant Joints: Where movable, non expansion-type joints are required, form metal to provide for proper installation of elastomeric sealant according to cited sheet metal standard.

E. Fabricate cleats and attachment devices from same material as accessory being anchored or from compatible, noncorrosive metal.

F. Seams: Fabricate nonmoving seams with flat-lock seams. Form seams and seal with elastomeric sealant unless otherwise recommended by sealant manufacturer for intended use.

G. Do not use graphite pencils to mark metal surfaces.

7. ROOF-DRAINAGE SHEET METAL FABRICATIONS

A. Hanging Gutters: Fabricate to cross section required, complete with end pieces, outlet tubes, and other accessories as required. Fabricate in minimum 96-inch- long sections. Furnish flat-stock gutter brackets and flat-stock gutter spacers and straps fabricated from same metal as gutters, of size recommended by cited sheet metal standard but with thickness not less than dimension indicated on Drawings. Fabricate expansion joints, expansion-joint covers, gutter bead reinforcing bars, and gutter accessories from same metal as gutters. Shop fabricate interior and exterior corners.

1. Gutter Profile: Style B according to cited sheet metal standard.
2. Expansion Joints: Butt type with cover plate.
3. Accessories: Continuous, removable leaf screen with sheet metal frame and hardware cloth screen.
4. Gutters with Girth up to 15 Inches: Fabricate from the following materials:
   a. Galvanized Steel: 22 gauge thickness.

B. Downspouts: Fabricate downspouts per plans and details or per size per CA plumbing code. Fabricate from the following materials unless otherwise shown on drawings.
1. Galvanized Steel: 22 gauge thickness.

C. Conductor Heads: Fabricate conductor heads with flanged back and stiffened top edge and of dimensions and shape required, complete with outlet tubes, exterior flange trim, and built-in overflows. Fabricate from the following materials:

1. Galvanized Steel: 22 gauge thickness.

8. WALL SHEET METAL FABRICATIONS

A. Through-Wall Flashing: Fabricate continuous flashings in minimum 96-inch- long, but not exceeding 12-foot long, sections, under copings, and at shelf angles. Fabricate discontinuous lintel, sill, and similar flashings to extend 6 inches beyond each side of wall openings; and form with 2-inch high, end dams. Fabricate from the following materials:

1. Galvanized Steel: 22 gauge thickness.

B. Opening Flashings in Frame Construction: Fabricate head, sill, jamb, and similar flashings to extend 4 inches beyond wall openings. Form head and sill flashing with 2-inch high, end dams. Fabricate from the following materials:

1. Galvanized Steel: 22 gauge thickness.

C. Wall Expansion-Joint Cover: Fabricate from the following materials:

1. Galvanized Steel: 22 gauge thickness.

9. MISCELLANEOUS SHEET METAL FABRICATIONS

A. Equipment Support Flashing: Fabricate from the following materials:

1. Galvanized Steel: 22 gauge thickness.

B. Overhead-Piping Safety Pans: Fabricate from the following materials:

1. Galvanized Steel: 22 gauge thickness.

3.EXECUTION

1. EXAMINATION

A. Examine substrates, areas, and conditions, with Installer present, for compliance with requirements for installation tolerances, substrate, and other conditions affecting performance of the Work.

1. Verify compliance with requirements for installation tolerances of substrates.
2. Verify that substrate is sound, dry, smooth, clean, sloped for drainage, and securely anchored.

3. Verify that air- or water-resistant barriers have been installed over sheathing or backing substrate to prevent air infiltration or water penetration.

B. Proceed with installation only after unsatisfactory conditions have been corrected.

2. UNDERLAYMENT INSTALLATION

A. Self-Adhering Sheet Underlayment: Install self-adhering sheet underlayment, wrinkle free. Prime substrate if recommended by underlayment manufacturer. Comply with temperature restrictions of underlayment manufacturer for installation; use primer for installing underlayment at low temperatures. Apply in shingle fashion to shed water, with end laps of not less than 6 inches staggered 24 inches between courses. Overlap side edges not less than 3-1/2 inches. Roll laps and edges with roller. Cover underlayment within 14 days.

B. Apply slip sheet, wrinkle free, directly on substrate before installing sheet metal flashing and trim.

3. INSTALLATION, GENERAL

A. General: Anchor sheet metal flashing and trim and other components of the Work securely in place, with provisions for thermal and structural movement. Use fasteners, solder, protective coatings, separators, sealants, and other miscellaneous items as required to complete sheet metal flashing and trim system.

1. Install sheet metal flashing and trim true to line, levels, and slopes. Provide uniform, neat seams with minimum exposure of solder, welds, and sealant.
2. Install sheet metal flashing and trim to fit substrates and to result in watertight performance. Verify shapes and dimensions of surfaces to be covered before fabricating sheet metal.
3. Space cleats not more than 12 inches apart. Attach each cleat with at least two fasteners. Bend tabs over fasteners.
4. Install exposed sheet metal flashing and trim with limited oil canning, and free of buckling and tool marks.
5. Torch cutting of sheet metal flashing and trim is not permitted.
6. Do not use graphite pencils to mark metal surfaces.

B. Metal Protection: Where dissimilar metals contact each other, or where metal contacts pressure-treated wood or other corrosive substrates, protect against galvanic action or corrosion by painting contact surfaces with bituminous coating or by other permanent separation as recommended by sheet metal manufacturer or cited sheet metal standard.

1. Coat concealed side of stainless-steel sheet metal flashing and trim with bituminous coating where flashing and trim contact wood, ferrous metal, or cementitious construction.
2. Underlayment: Where installing sheet metal flashing and trim directly on cementitious or wood substrates, install underlayment and cover with slip sheet.

C. Expansion Provisions: Provide for thermal expansion of exposed flashing and trim. Space movement joints at maximum of 10 feet with no joints within 24 inches of corner or intersection.

1. Form expansion joints of intermeshing hooked flanges, not less than 1 inch deep, filled with sealant concealed within joints.
2. Use lapped expansion joints only where indicated on Drawings.

D. Fasteners: Use fastener sizes that penetrate wood blocking or sheathing not less than 1-1/4 inches for nails and not less than 3/4 inch for wood screws.

E. Conceal fasteners and expansion provisions where possible in exposed work and locate to minimize possibility of leakage. Cover and seal fasteners and anchors as required for a tight installation.

F. Seal joints as required for watertight construction.

1. Use sealant-filled joints unless otherwise indicated. Embed hooked flanges of joint members not less than 1 inch into sealant. Form joints to completely conceal sealant. When ambient temperature at time of installation is between 40 and 70 deg F, set joint members for 50 percent movement each way. Adjust setting proportionately for installation at higher ambient temperatures. Do not install sealant-type joints at temperatures below 40 deg F.
2. Prepare joints and apply sealants to comply with requirements in Section 079200 "Joint Sealants."

G. Soldered Joints: Clean surfaces to be soldered, removing oils and foreign matter. Pre-tin edges of sheets with solder to width of 1-1/2 inches; however, reduce pre-tinning where pre-tinned surface would show in completed Work.

1. Do not solder metallic-coated steel sheet.
2. Do not pre-tin zinc-tin alloy-coated stainless steel.
3. Do not use torches for soldering.
4. Heat surfaces to receive solder, and flow solder into joint. Fill joint completely. Completely remove flux and spatter from exposed surfaces.
5. Stainless-Steel Soldering: Tin edges of uncoated sheets, using solder for stainless steel and acid flux. Promptly remove acid flux residue from metal after tinning and soldering. Comply with solder manufacturer's recommended methods for cleaning and neutralization.
6. Copper Soldering: Tin edges of uncoated sheets, using solder for copper.
7. Copper-Clad Stainless-Steel Soldering: Tin edges of uncoated sheets, using solder for copper-clad stainless steel.

H. Rivets: Rivet joints in zinc where necessary for strength.

4. ROOF-DRAINAGE SYSTEM INSTALLATION

A. General: Install sheet metal roof-drainage items to produce complete roof-drainage system according to cited sheet metal standard unless otherwise indicated. Coordinate installation of roof perimeter flashing with installation of roof-drainage system.

B. Hanging Gutters: Join sections with riveted and soldered joints or joints sealed with sealant as shown and specified on drawings or summary/scope of work. Provide for thermal expansion. Attach gutters at eave or fascia to firmly anchor them in position. Provide end closures and seal watertight with sealant. Slope to downspouts.

1. Fasten gutter spacers to front and back of gutter.
2. Anchor and loosely lock back edge of gutter to continuous cleat, eave or apron flashing.
3. Anchor back of gutter that extends onto roof deck with cleats spaced not more than 24 inches apart.
4. Anchor gutter with gutter brackets and straps spaced not more than 24 inches apart to roof deck, unless otherwise indicated, and loosely lock to front gutter bead.
5. Anchor gutter with spikes and ferrules spaced not more than 24 inches apart.
6. Install gutter with expansion joints at locations indicated, but not exceeding, 50 feet apart. Install expansion-joint caps.
7. Install continuous gutter screens on gutters with noncorrosive fasteners, removable for cleaning gutters.

C. Conductor Heads: Anchor securely to wall, with elevation of conductor head rim at minimum of 1 inch below gutter discharge.

D. Expansion-Joint Covers: Install expansion-joint covers at locations and of configuration indicated. Lap joints minimum of 4 inches in direction of water flow.

5. ROOF FLASHING INSTALLATION

A. General: Install sheet metal flashing and trim to comply with performance requirements, sheet metal manufacturer's written installation instructions, and cited sheet metal standard. Provide concealed fasteners where possible, and set units true to line, levels, and slopes. Install work with laps, joints, and seams that are permanently watertight and weather resistant.

B. Roof Edge Flashing: Anchor to resist uplift and outward forces according to recommendations in FM Global Property Loss Prevention Data Sheet 1-49 for FM Approvals' listing for required windstorm classification. All roof edge flashings are to incorporate a minimum 22 gauge continuous cleat.

C. Copings: Anchor to resist uplift and outward forces according to recommendations in cited sheet metal standard unless otherwise indicated.

1. Interlock exterior bottom edge of coping with continuous cleat anchored to substrate at 24-inch centers.
2. Anchor interior leg of coping with washers and screw fasteners through slotted holes at 24-inch centers.

D. Copings: Anchor to resist uplift and outward forces according to recommendations in FM Global Property Loss Prevention Data Sheet 1-49 for specified FM Approvals' listing for required windstorm classification.

E. Pipe or Post Counterflashing: Install counterflashing umbrella with close-fitting collar with top edge flared for elastomeric sealant, extending minimum of 4 inches over base flashing. Install stainless-steel draw band and tighten.

F. Counterflashing: Coordinate installation of counterflashing with installation of base flashing. Insert counterflashing in reglets or receivers and fit tightly to base flashing. Extend counterflashing 4 inches over base flashing. Lap counterflashing joints minimum of 4 inches. Secure in waterproof manner by means of interlocking folded seam or blind rivets and sealant, anchor and washer at 36-inch centers unless otherwise indicated.

G. Roof-Penetration Flashing: Coordinate installation of roof-penetration flashing with installation of roofing and other items penetrating roof. Seal with elastomeric sealant and clamp flashing to pipes that penetrate roof.

6. WALL FLASHING INSTALLATION

A. General: Install sheet metal wall flashing to intercept and exclude penetrating moisture according to cited sheet metal standard unless otherwise indicated. Coordinate installation of wall flashing with installation of wall-opening components such as windows, doors, and louvers.

B. Through-Wall Flashing: Installation of through-wall flashing is specified in Section 042000 "Unit Masonry."Section092400 "Cement Plastering."

C. Opening Flashings in Frame Construction: Install continuous head, sill, jamb, and similar flashings to extend 4 inches beyond wall openings.

7. MISCELLANEOUS FLASHING INSTALLATION

A. Equipment Support Flashing: Coordinate installation of equipment support flashing with installation of roofing and equipment. Weld or seal flashing with elastomeric sealant to equipment support member.

B. Overhead-Piping Safety Pans: Suspend pans from structure above, independent of other overhead items such as equipment, piping, and conduit, unless otherwise indicated on Drawings. Pipe and install drain line to plumbing waste or drainage system.

8. ERECTION TOLERANCES

A. Installation Tolerances: Shim and align sheet metal flashing and trim within installed tolerance of 1/4 inch in 20 feet on slope and location lines indicated on Drawings and within 1/8-inch offset of adjoining faces and of alignment of matching profiles.

B. Installation Tolerances: Shim and align sheet metal flashing and trim within installed tolerances specified in MCA's "Guide Specification for Residential Metal Roofing."

9. CLEANING AND PROTECTION

A. Clean exposed metal surfaces of substances that interfere with uniform oxidation and weathering.

B. Clean and neutralize flux materials. Clean off excess solder.

C. Clean off excess sealants.

D. Remove temporary protective coverings and strippable films as sheet metal flashing and trim are installed unless otherwise indicated in manufacturer's written installation instructions. On completion of sheet metal flashing and trim installation, remove unused materials and clean finished surfaces as recommended by sheet metal flashing and trim manufacturer. Maintain sheet metal flashing and trim in clean condition during construction.

E. Replace sheet metal flashing and trim that have been damaged or that have deteriorated beyond successful repair by finish touchup or similar minor repair procedures.

END OF SECTION 07 62 00

Two-
Layers
Terra Seal
KEE-Stone
Roof
Systems
Mission Oaks Recreation
& Park District

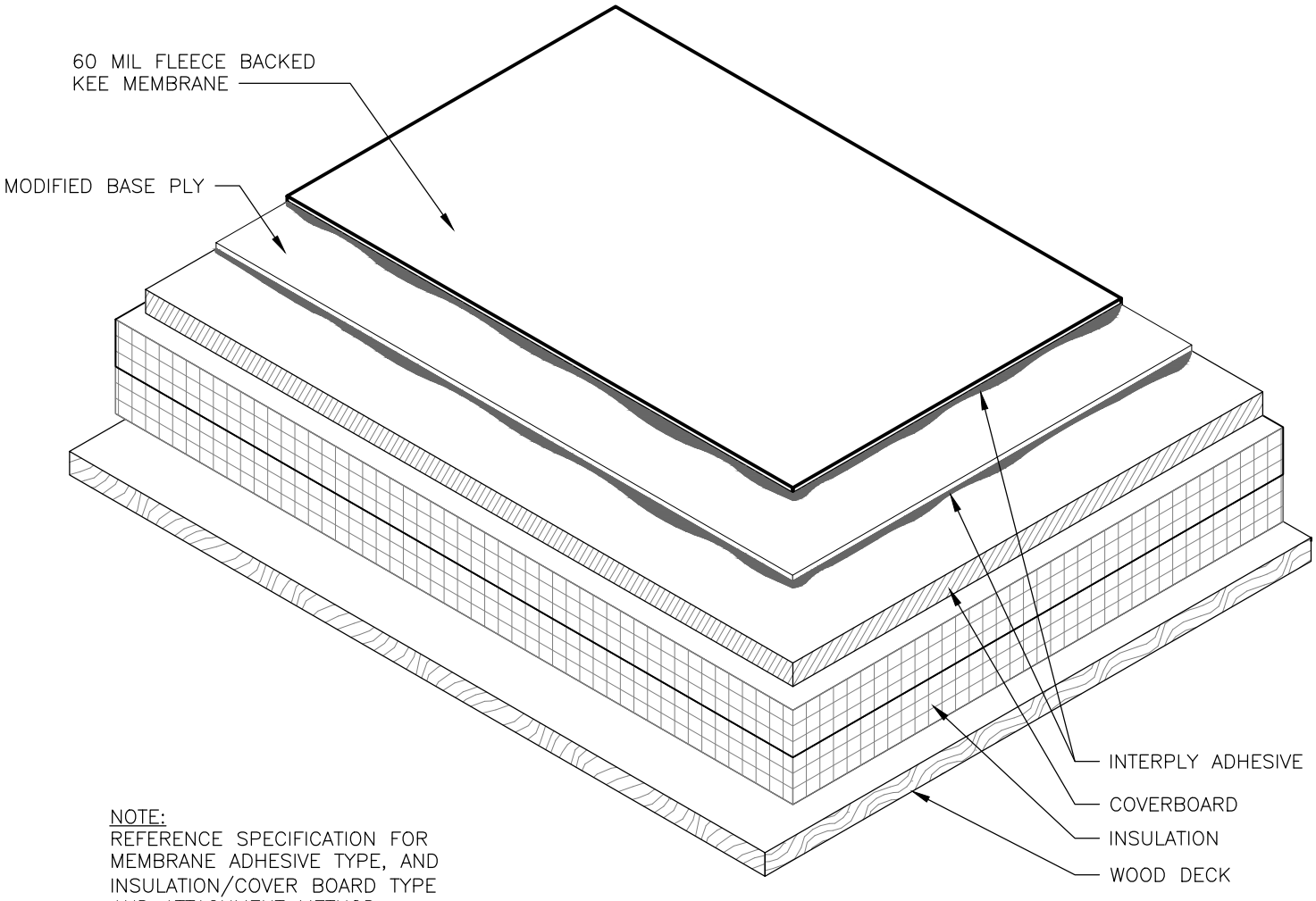

NOTE:
REFERENCE SPECIFICATION FOR MEMBRANE ADHESIVE TYPE, AND INSULATION/COVER BOARD TYPE AND ATTACHMENT METHOD.

DRAWINGS ON $8\frac{1}{2}$"x11 TITLE BLOCKS ARE NOT TO SCALE.

TYPICAL ROOF SYSTEM SURFACE

THE GARLAND COMPANY, INC.
GARLAND CANADA, INC.
THE GARLAND COMPANY UK, LTD

since 1895

PROJECT:	
CUSTOMER:	
ARCHITECT:	
REPRESENTATIVE:	
DATE:	SHT: OF

© 2023 Garland Industries, Inc.

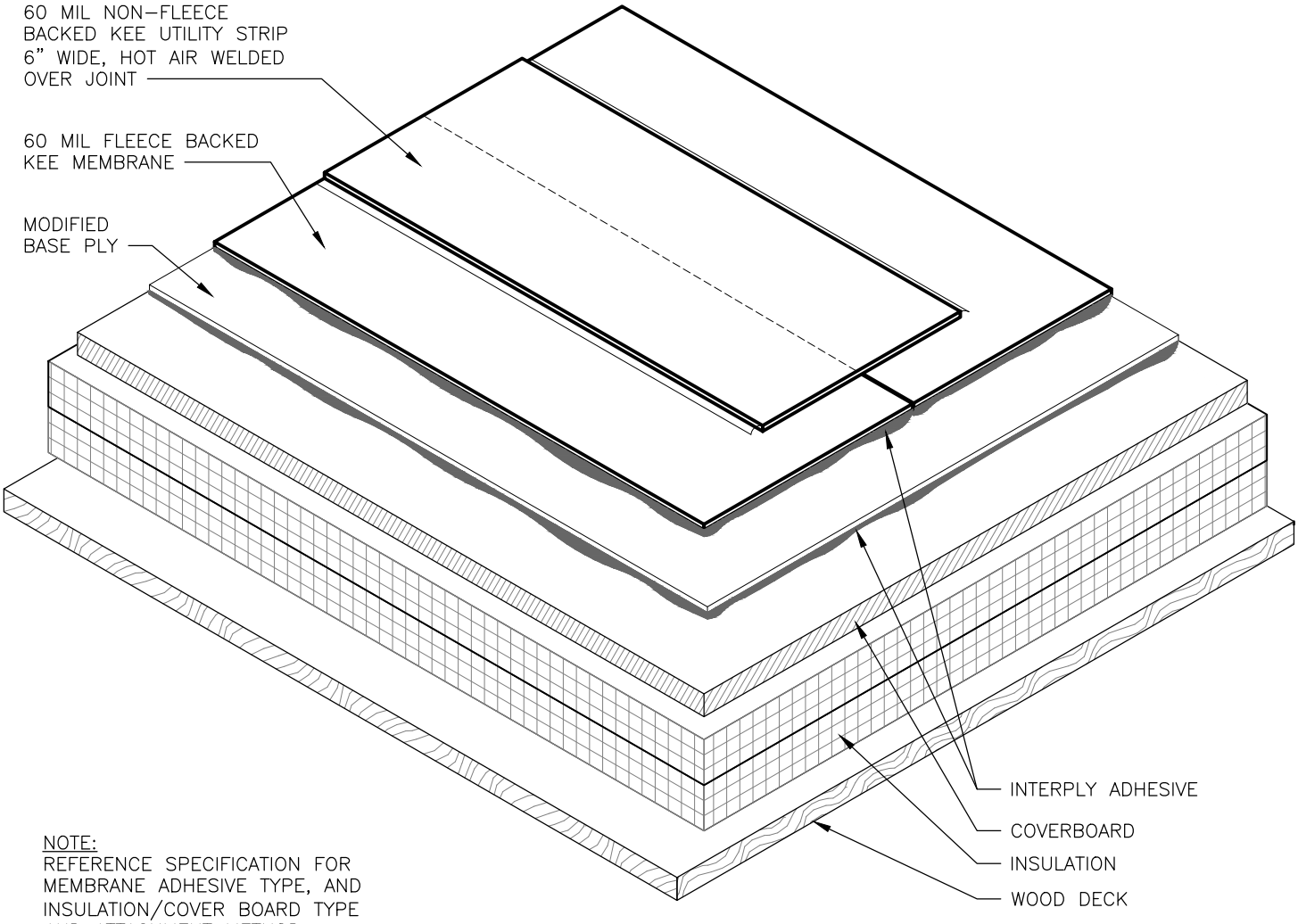

NOTE:
REFERENCE SPECIFICATION FOR MEMBRANE ADHESIVE TYPE, AND INSULATION/COVER BOARD TYPE AND ATTACHMENT METHOD.

DRAWINGS ON $8\frac{1}{2}$"x11 TITLE BLOCKS ARE NOT TO SCALE.

TYPICAL ROOF SYSTEM SURFACE - MEMBRANE END LAP BUTT

THE GARLAND COMPANY, INC.
GARLAND CANADA, INC.
THE GARLAND COMPANY UK, LTD

since 1895

PROJECT:	
CUSTOMER:	
ARCHITECT:	
REPRESENTATIVE:	
DATE:	SHT: OF

© 2023 Garland Industries, Inc.

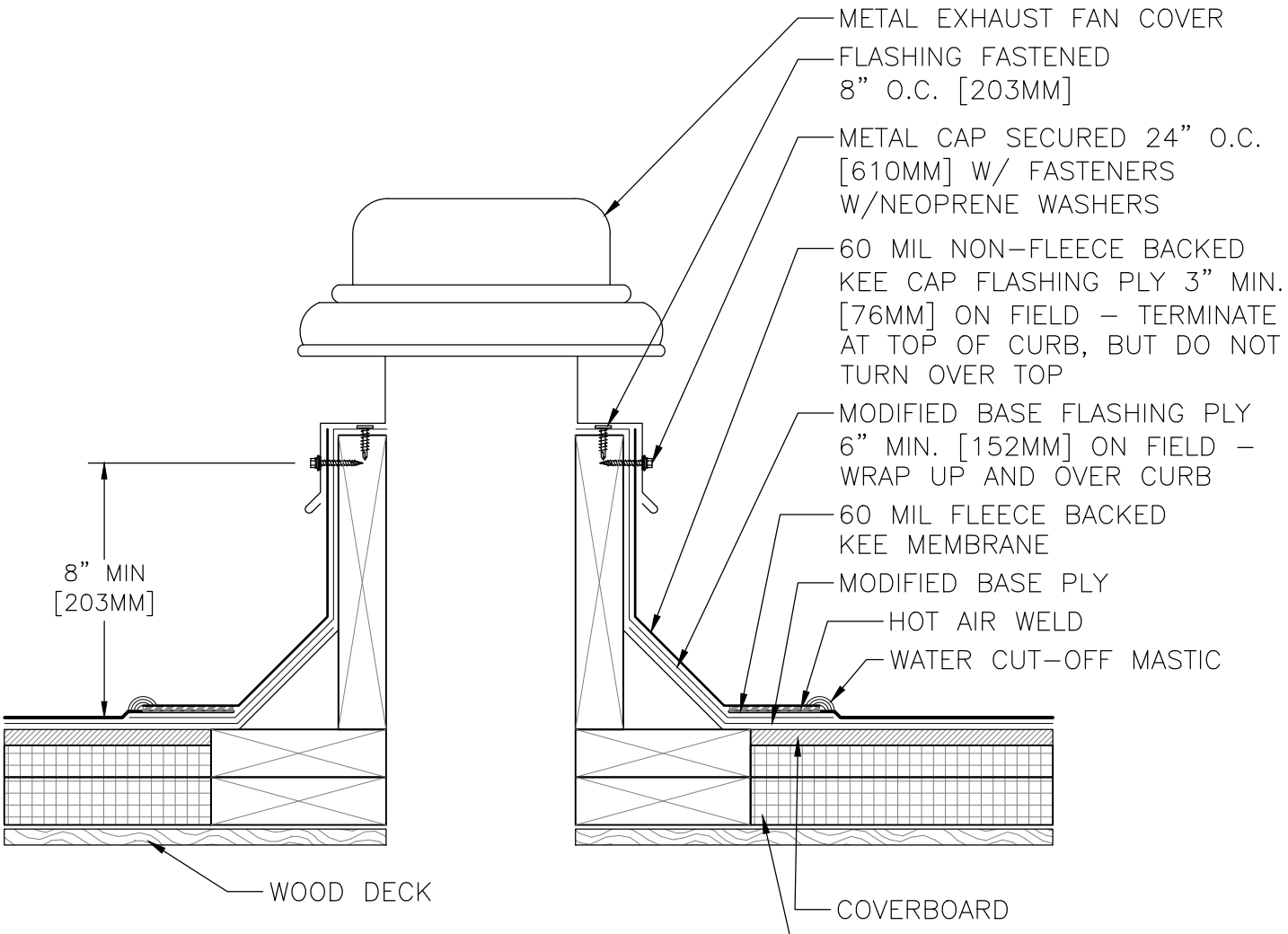

NOTE:
REFERENCE SPECIFICATION FOR MEMBRANE ADHESIVE TYPE, AND INSULATION/COVER BOARD TYPE AND ATTACHMENT METHOD.

DRAWINGS ON $8\frac{1}{2}$"x11 TITLE BLOCKS ARE NOT TO SCALE.

EXHAUST FAN

THE GARLAND COMPANY, INC.
GARLAND CANADA, INC.
THE GARLAND COMPANY UK, LTD

since 1895

PROJECT:	
CUSTOMER:	
ARCHITECT:	
REPRESENTATIVE:	
DATE:	SHT: OF

© 2023 Garland Industries, Inc.

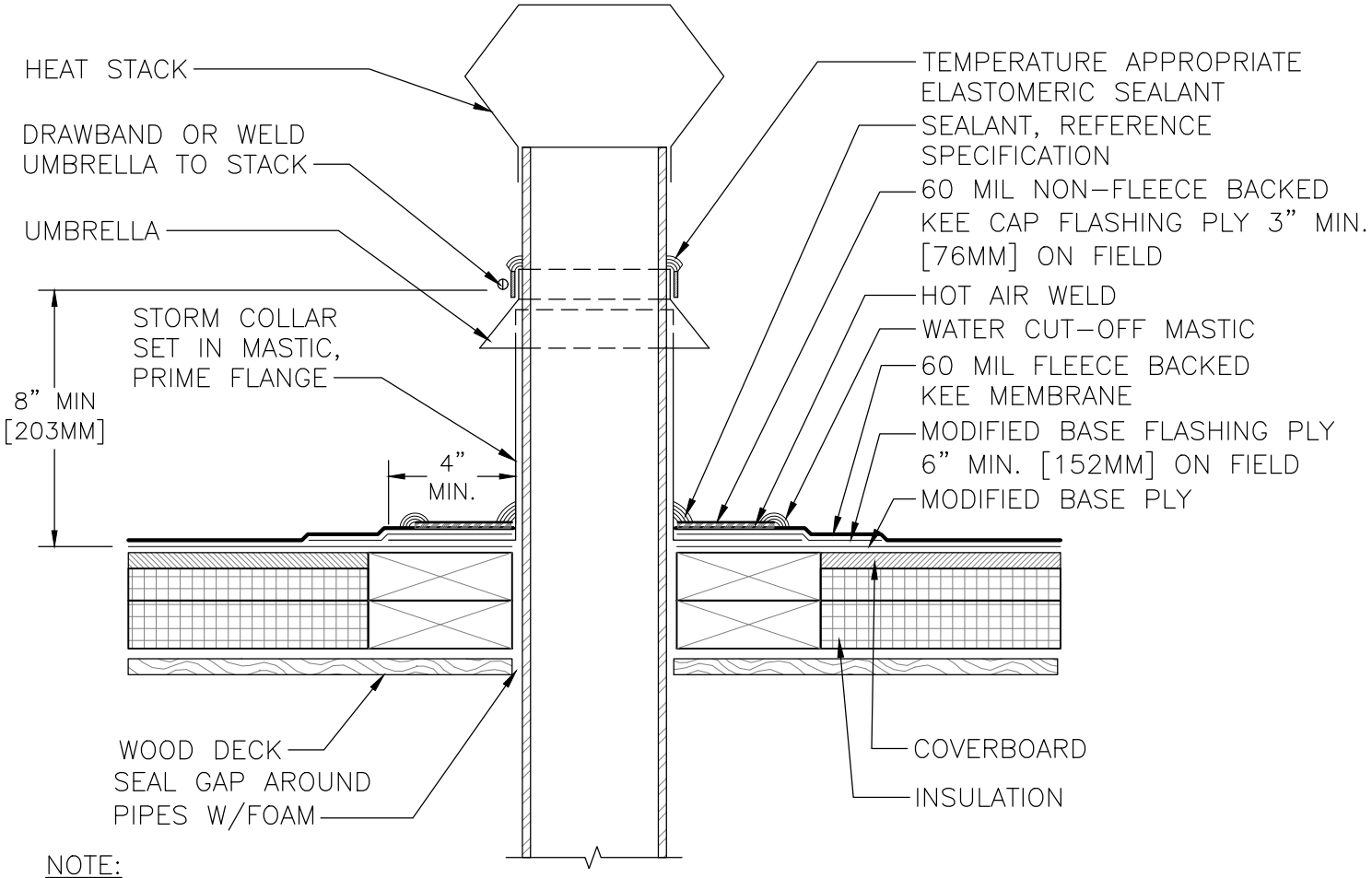

NOTE:
REFERENCE SPECIFICATION FOR MEMBRANE ADHESIVE TYPE, AND INSULATION/COVER BOARD TYPE AND ATTACHMENT METHOD.

DRAWINGS ON $8\frac{1}{2}$"x11 TITLE BLOCKS ARE NOT TO SCALE.

HEAT STACK

THE GARLAND COMPANY, INC.
GARLAND CANADA, INC.
THE GARLAND COMPANY UK, LTD

since 1895

PROJECT:	
CUSTOMER:	
ARCHITECT:	
REPRESENTATIVE:	
DATE:	SHT: OF

© 2023 Garland Industries, Inc.

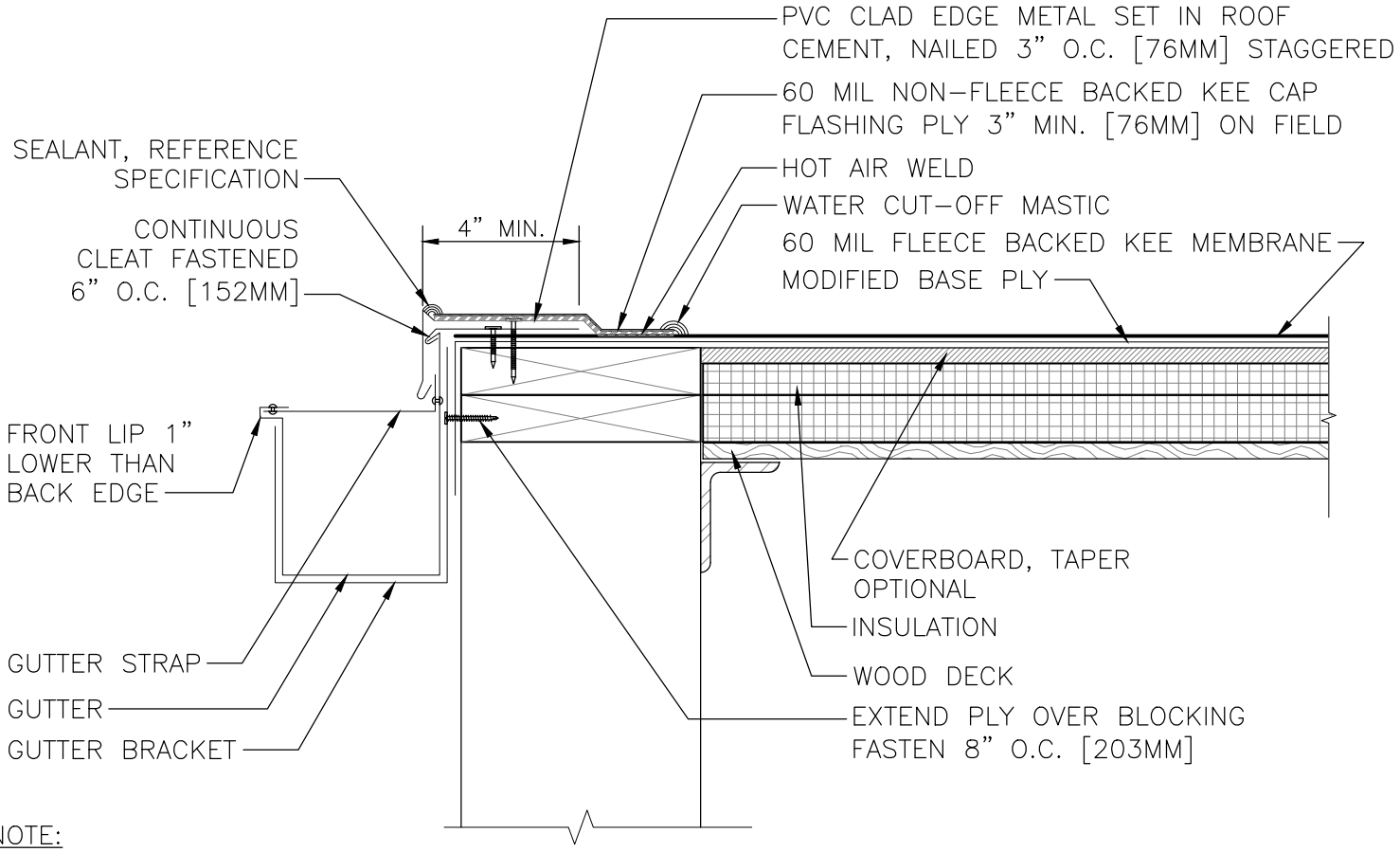

NOTE:

1. REFERENCE SPECIFICATION FOR MEMBRANE ADHESIVE TYPE, AND INSULATION/COVER BOARD TYPE AND ATTACHMENT METHOD.
2. INSTALL COMPONENTS TO MAINTAIN POSITIVE DRAINAGE TO THE GUTTER.

DRAWINGS ON $8\frac{1}{2}$"x11 TITLE BLOCKS ARE NOT TO SCALE.

METAL EDGE - DRIP EDGE w/GUTTER (ALTERNATE) w/PVC CLAD EDGE METAL

GARLAND since 1895

THE GARLAND COMPANY, INC.
GARLAND CANADA, INC.
THE GARLAND COMPANY UK, LTD

PROJECT:	
CUSTOMER:	
ARCHITECT:	
REPRESENTATIVE:	
DATE:	SHT: OF

© 2023 Garland Industries, Inc.

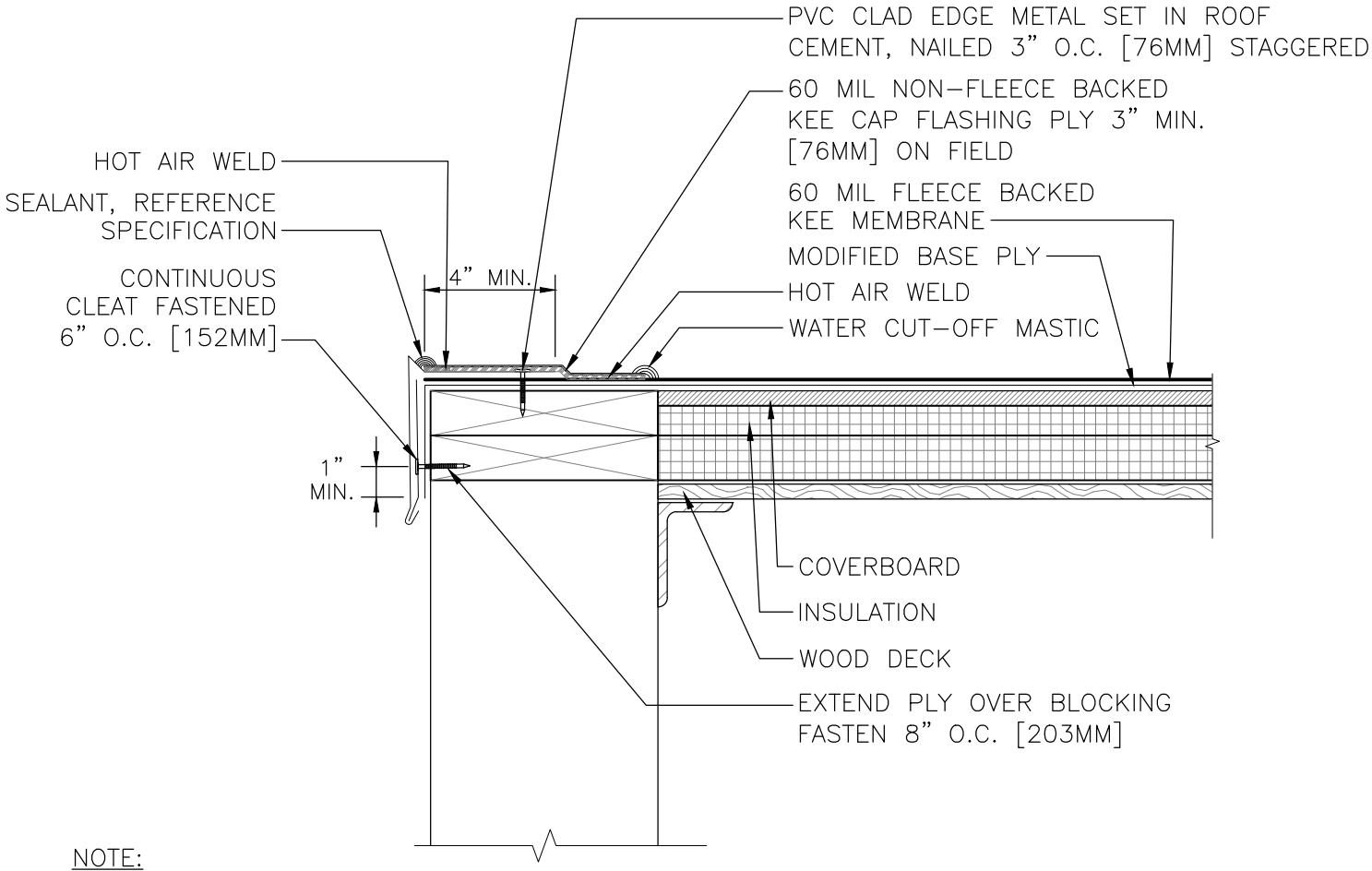

NOTE:
REFERENCE SPECIFICATION FOR MEMBRANE ADHESIVE TYPE, AND INSULATION/COVER BOARD TYPE AND ATTACHMENT METHOD.

DRAWINGS ON $8\frac{1}{2}$"x11 TITLE BLOCKS ARE NOT TO SCALE.

METAL EDGE - GRAVELSTOP (ALTERNATE) w/PVC CLAD EDGE METAL

GARLAND since 1895

THE GARLAND COMPANY, INC.
GARLAND CANADA, INC.
THE GARLAND COMPANY UK, LTD

PROJECT:	
CUSTOMER:	
ARCHITECT:	
REPRESENTATIVE:	
DATE:	SHT: OF

© 2023 Garland Industries, Inc.

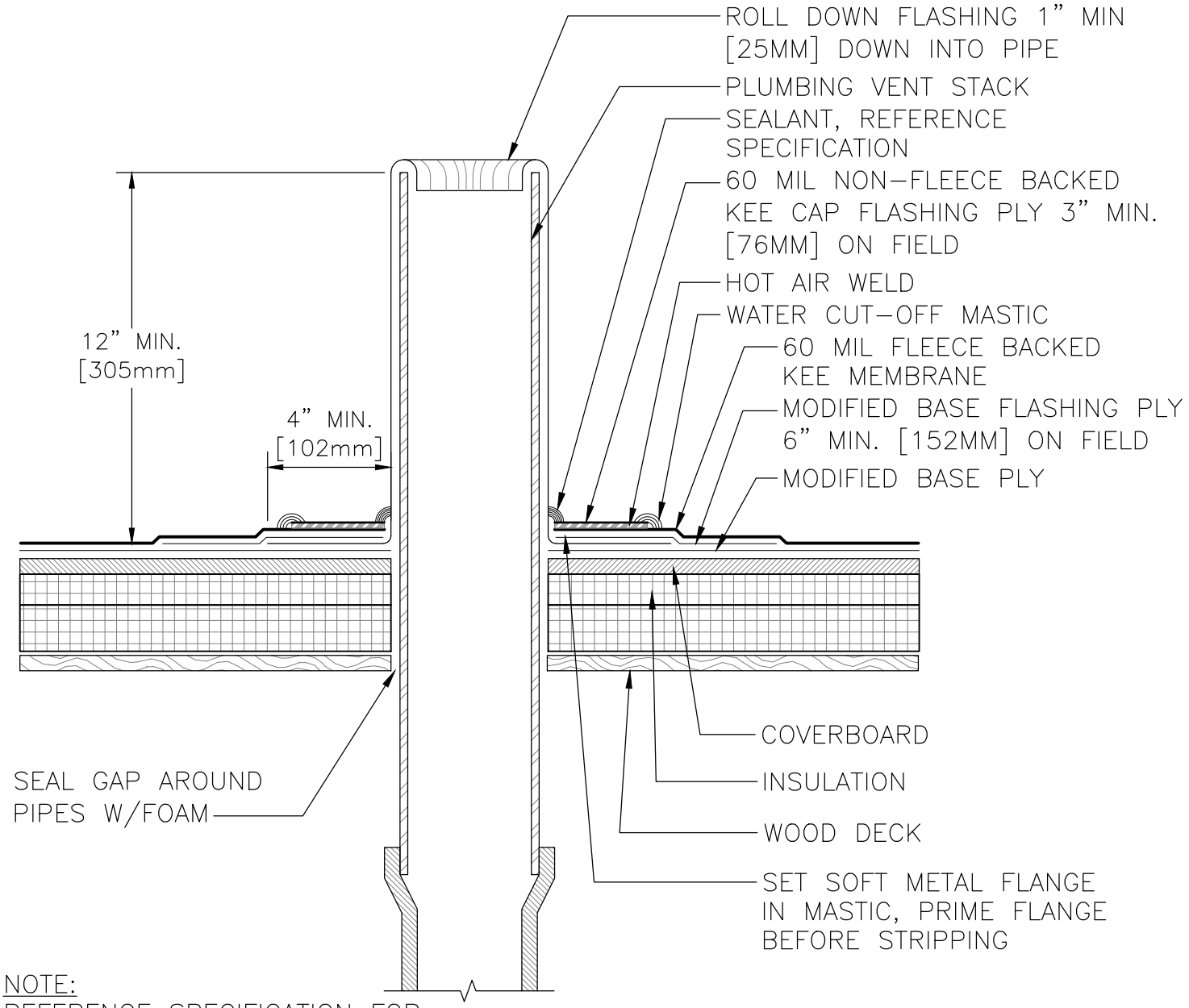

NOTE:
REFERENCE SPECIFICATION FOR MEMBRANE ADHESIVE TYPE, AND INSULATION/COVER BOARD TYPE AND ATTACHMENT METHOD.

DRAWINGS ON $8\frac{1}{2}$"x11 TITLE BLOCKS ARE NOT TO SCALE.

PLUMBING STACK

THE GARLAND COMPANY, INC.
GARLAND CANADA, INC.
THE GARLAND COMPANY UK, LTD

since 1895

PROJECT:	
CUSTOMER:	
ARCHITECT:	
REPRESENTATIVE:	
DATE:	SHT: OF

© 2023 Garland Industries, Inc.

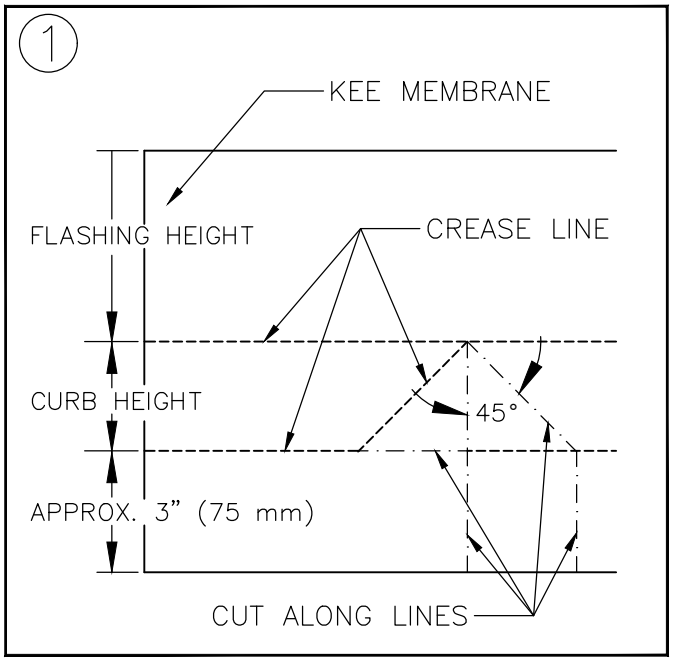

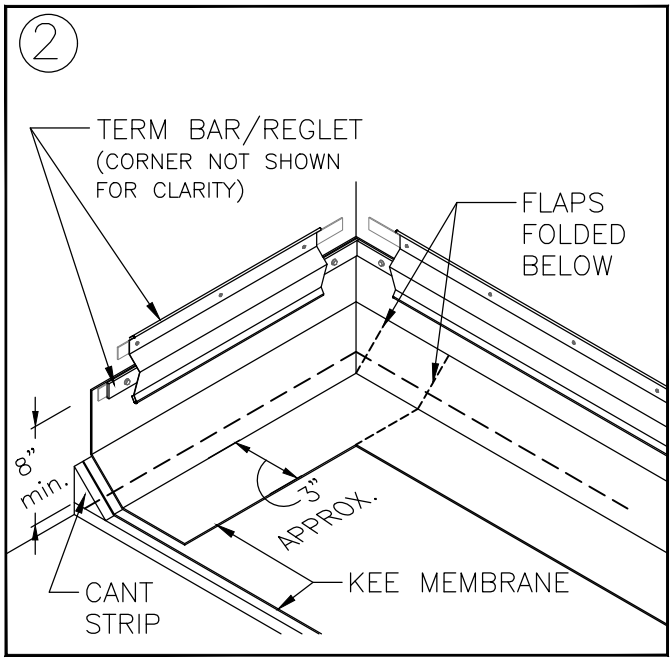

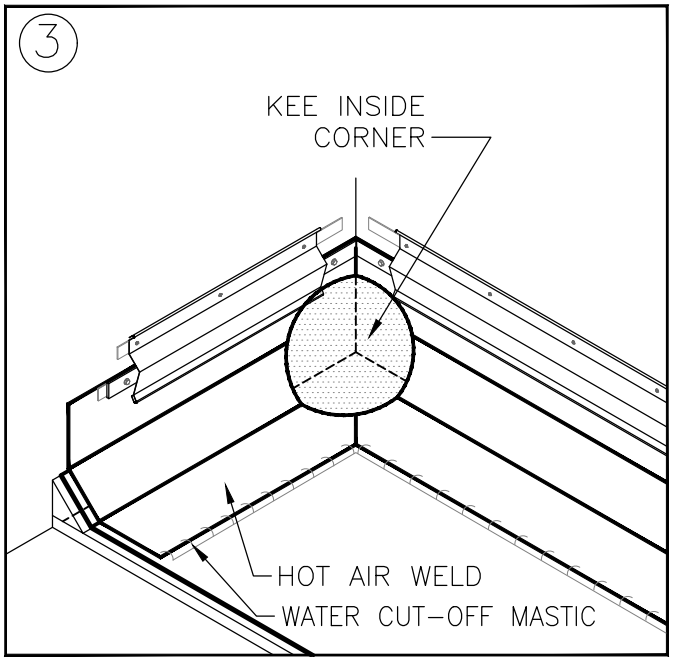

NOTES:

1. APPROXIMATELY 1/8" (3 mm) DIAMETER BEAD OF CUT-EDGE SEALANT IS REQUIRED ON CUT EDGES OF REINFORCED MEMBRANE.

PRE-MOLDED INSIDE CORNER FLASHING

SCALE: NTS

DRAWINGS ON $8\frac{1}{2}$"x11 TITLE BLOCKS ARE NOT TO SCALE.

PRE-MOLDED INSIDE CORNER FLASHING

GARLAND since 1895

THE GARLAND COMPANY, INC.
GARLAND CANADA, INC.
THE GARLAND COMPANY UK, LTD

PROJECT:	
CUSTOMER:	
ARCHITECT:	
REPRESENTATIVE:	
DATE:	SHT: OF

© 2023 Garland Industries, Inc.

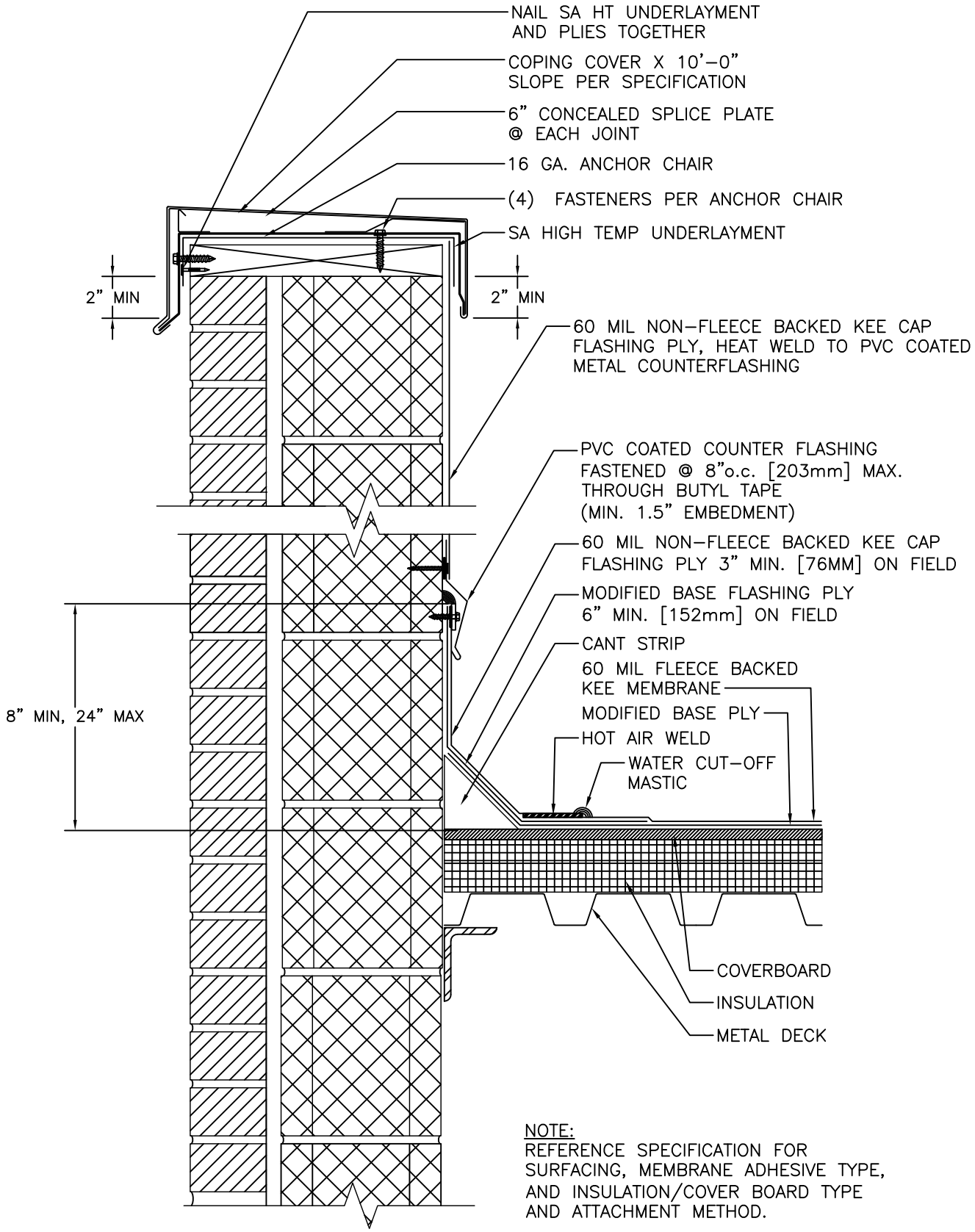

NOTE:
REFERENCE SPECIFICATION FOR SURFACING, MEMBRANE ADHESIVE TYPE, AND INSULATION/COVER BOARD TYPE AND ATTACHMENT METHOD.

DRAWINGS ON 8½"x11 TITLE BLOCKS ARE NOT TO SCALE.

WALL FLASHING TO COPING CAP W BREAK COUNTER FLASHING

GARLAND
since 1895

THE GARLAND COMPANY, INC.
GARLAND CANADA, INC.
THE GARLAND COMPANY UK, LTD

PROJECT:	
CUSTOMER:	
ARCHITECT:	
REPRESENTATIVE:	
DATE:	SHT: OF

© 2024 Garland Industries, Inc.